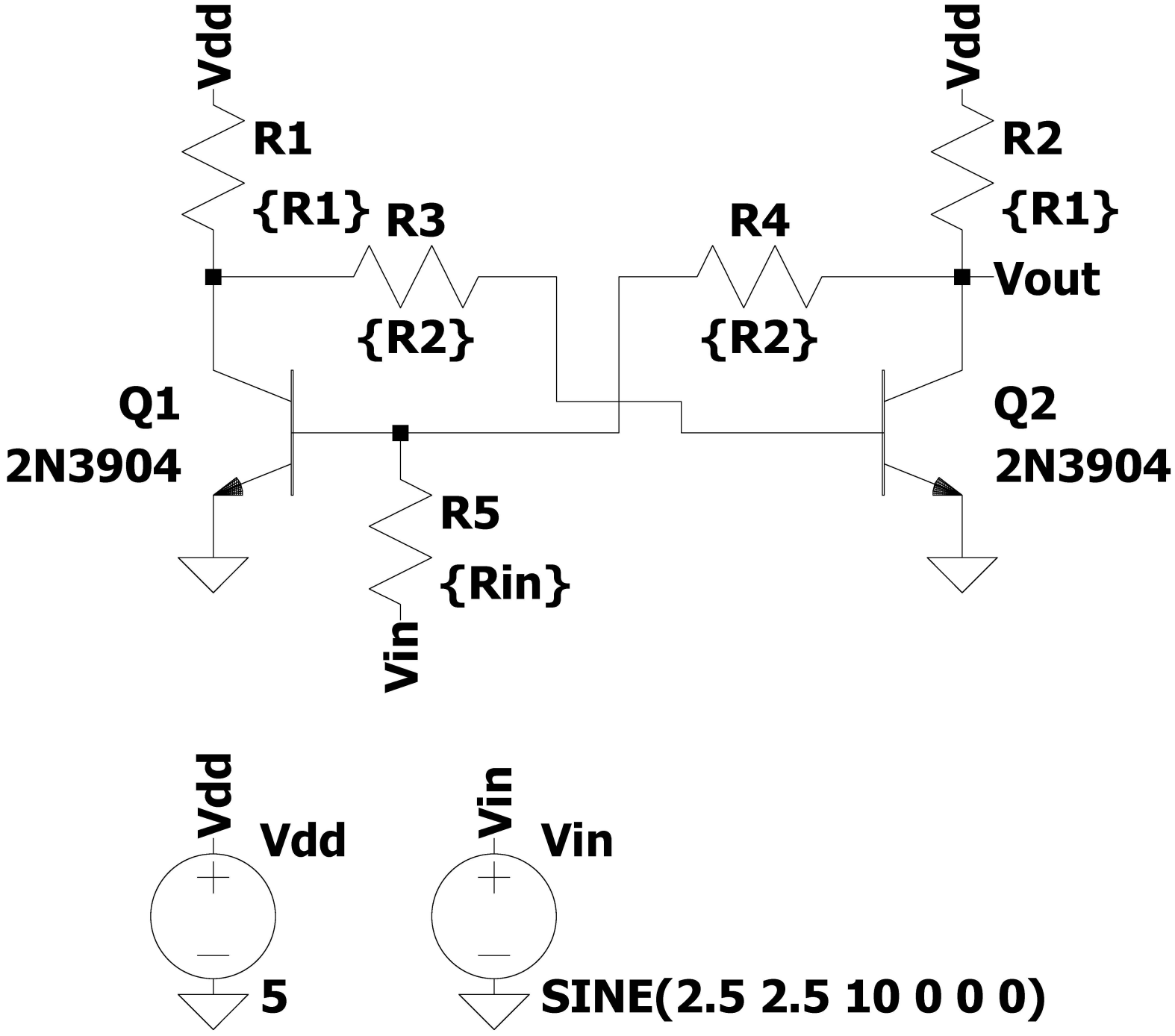


```
.tran 1 startup
.param R1=6k R2=10k Rin=2k
.step param R1 1k 10k 1k
```