Intro Microelectronic Circuits with Laboratory

Resistors and Resistive Networks

Elias Tuthill[1], **Anika Mahesh**[1] **and Henry Tejada Deras**[1]

[1]*Franklin W. Olin College of Engineering*

1. Experiment 1: Resistance Measurement

1.1. Results

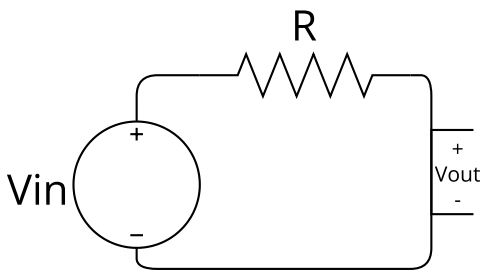

Figure 1. The schematic for the setup we used in Experiment One.

For our first method of measuring our resistor, we looked at the color code on the resistor which showed that it had a resistance of 1.5 kΩ with a 5% tolerance. For our second method, we used the Keithley 2400 SourceMeter to measure the resistance of the resistor and found it to be 1.48377 kΩ. For our third method, we used the SMU to measure the current through the resistor at different voltages and plotted the current-voltage characteristic of the resistor. We then used MATLAB's polyfit() function to create a linear fit on this data. We found the resistance value from the slope of the line, which was approximately 1.485 kΩ. The data with fit can be seen in Figure 2.

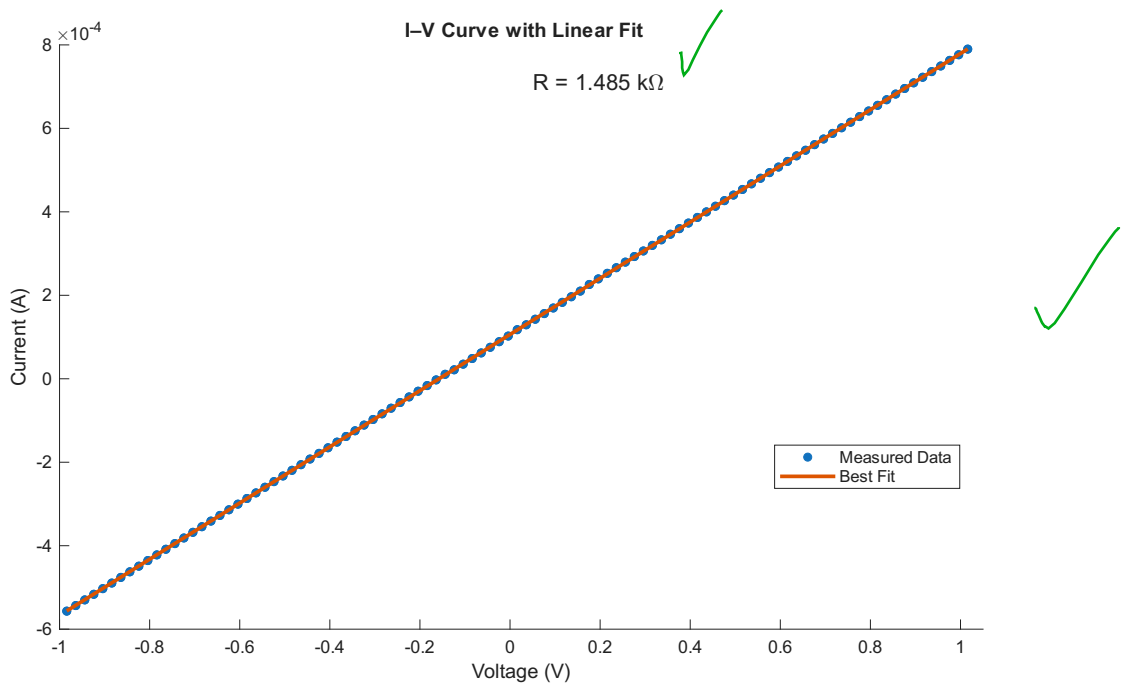

Figure 2. Current–voltage characteristic of the resistor measured with the SMU, with a linear fit used to extract the resistance from the SMU data.

1.2. Analysis

The resistance calculated via the line of best fit from the SMU data was off by about 0.002 kΩ from the resistance measured by the SourceMeter. The main reason for this discrepancy is the measurement resolution provided by the SMU. The SMU can accurately measure voltages up to 18-bit resolution (~5.4 digits), which means that the last number is unreliable (each voltage measurement had 4 digits after the decimal point and one digit before it, which makes for a total of 5 digits) because the last digit is affected by the rounding up and down of the remaining~0.4 digits of information. Another possible reason for this discrepancy comes from how we placed the resistor on the breadboard. The rails in the breadboard itself have some resistance, which would have slightly dropped the voltage across the resistor (which we use to measure the resistance using Ohm's law) and, by extension, affected the resistance measurement from the SMU.

1.3. Discussion

The nominal resistance value of the resistor was 1.5kΩ with a 5% tolerance. The resistance measured by the SourceMeter was 1.48377 kΩ, which has a percent error of 1.08% which is less than the 5% tolerance. However the SourceMeter is still subject to a small error rate because while it aims to approximate an ideal voltmeter, it will not truly be infinite resistance. Additionally the resistor itself is subject to a small error rate because of the manufacturing process. In the curve fit plot, the value is likely more accurate because it is based on multiple values of voltage and current. However, there is still some error because of inaccuracy in measurements and the small resistance in wires. However the fact that the value by the SourceMeter is similar to the value from the curve fit plot suggests that both these methods result in a value that is close to the true resistance of the resistor

2. Experiment 2: Resistive Voltage Division

2.1. Results

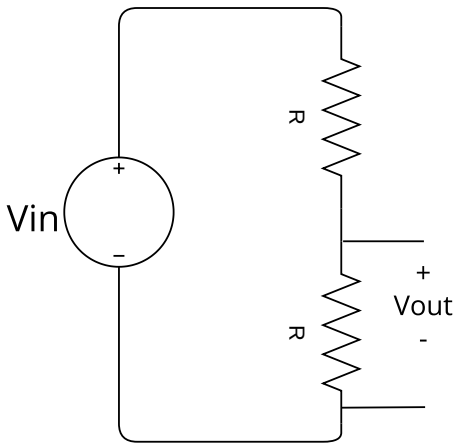

Figure 3. The schematic for the setup we used in Experiment Two.

The following data was measured from two Bourns 4116R-1-103LF DIP chip resistors, in which resistor measurements 1-8 are from the first chip and measurements 9-16 are from the other chip. The measurements were made using a Keithley 2400 SourceMeter. The average resistance of the first chip was 9.9552125 kΩ and was 9.9554875 kΩ for the second chip. The standard deviation for the first chip was 0.009909 kΩ and 0.005610 kΩ for the second chip. While there was more variation in the first chip than in the second one, the variation was still within the ±2% tolerance.

Resistor	Resistance Measurement
1	9.9724 kΩ
2	9.9661 kΩ
3	9.9465 kΩ
4	9.9510 kΩ
5	9.9445 kΩ
6	9.9475 kΩ
7	9.9566 kΩ
8	9.9571 kΩ
9	9.9556 kΩ
10	9.9499 kΩ
11	9.9645 kΩ
12	9.9632 kΩ
13	9.9512 kΩ
14	9.9515 kΩ
15	9.9562 kΩ
16	9.9518 kΩ

Table 1. Resistance values in chip resistor as measured by the Keithley 2400 SourceMeter.

The voltage divider that was used was comprised of two resistors in series with each other, making a voltage divider ratio of 1/2. Figure 4 shows the voltage divider transfer characteristic as measured.

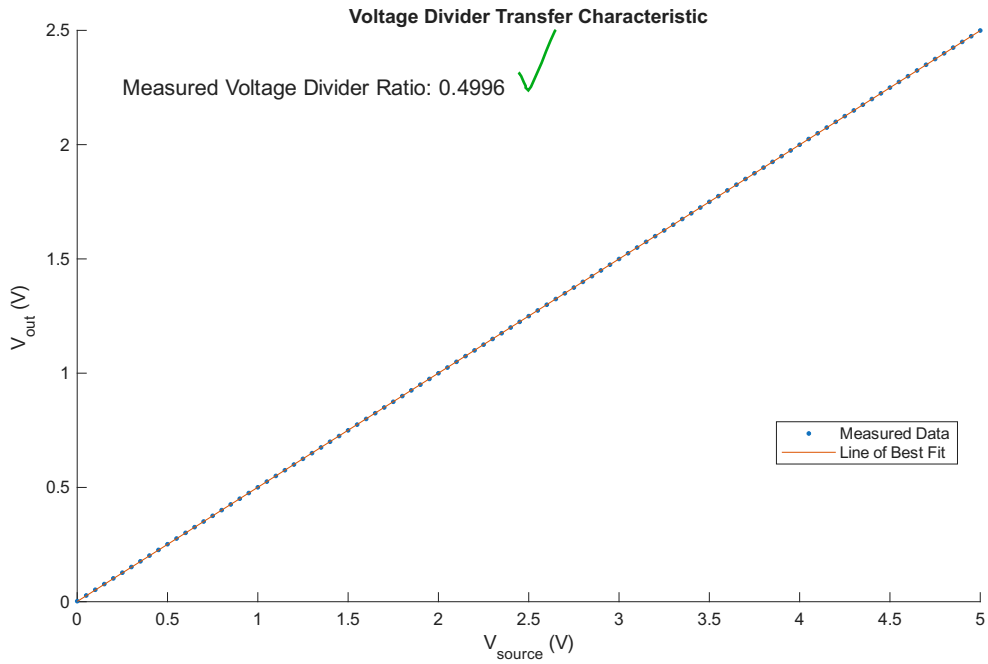

Figure 4. Voltage transfer characteristic of voltage divider circuit.

2.2. Analysis

For two resistors R_1 and R_2 connected in series as a voltage divider, the divider ratio is

$$H = \frac{V_{\text{out}}}{V_{\text{in}}} = \frac{R_2}{R_1 + R_2}.$$

If the two resistors are equal ($R_1 \approx R_2$), the ideal divider ratio is

$$H_{\text{ideal}} = \frac{1}{2} = 0.5.$$

From the resistance measurements, shown in Table 1, the first resistor array had an average resistance of 9.9552 kΩ with a standard deviation of 0.00991 kΩ. This means that the first chip had a variation of approximately 0.10%. The second array had an average resistance of 9.9555 kΩ with a standard deviation of 0.00561 kΩ, or 0.056%. Both of these values are much smaller than the ±2% tolerance of the resistors. The voltage divider was made using two resistors from the same chip to minimize mismatch. A linear fit of V_{out} versus V_{in} gave a measured divider ratio

$$H_{\text{measured}} = 0.4996.$$

The deviation from the ideal value is

$$\Delta H = 0.4996 - 0.5 = -0.0004,$$

which is an error of

$$\frac{|\Delta H|}{0.5} \times 100\% = 0.08\%.$$

This error is much smaller than the tolerance of the resistors and is similar to what we measured the resistor-to-resistor variation to be within a single chip.

2.3. Discussion

The resistance data show that the Bourns resistor arrays are well matched between resistors on the same chip. Although the absolute resistance of each array is specified only to ±2%, the measured spread within each chip was below 0.1%. This is an advantage of integrated resistor arrays. While the absolute values may vary, the ratios between resistors are highly consistent.

3. Experiment 3: Resistive Current Division

3.1. Results

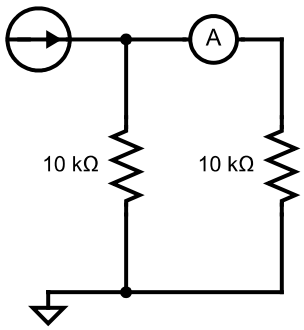

Figure 5. The schematic for the setup we used in Experiment Three.

For this experiment, we used one channel of the SMU to apply a source current and another channel of the SMU to measure the current through one of the branches of the current divider as noted by the above circuit diagram. We used the SMU to measure the current through the current divider at different input currents and plotted them in a graph. We then used MATLAB to create a linear fit on this data. We found the current divider ratio from the slope of the line, which was approximately 0.4988. The data with fit can be seen in Figure 6.

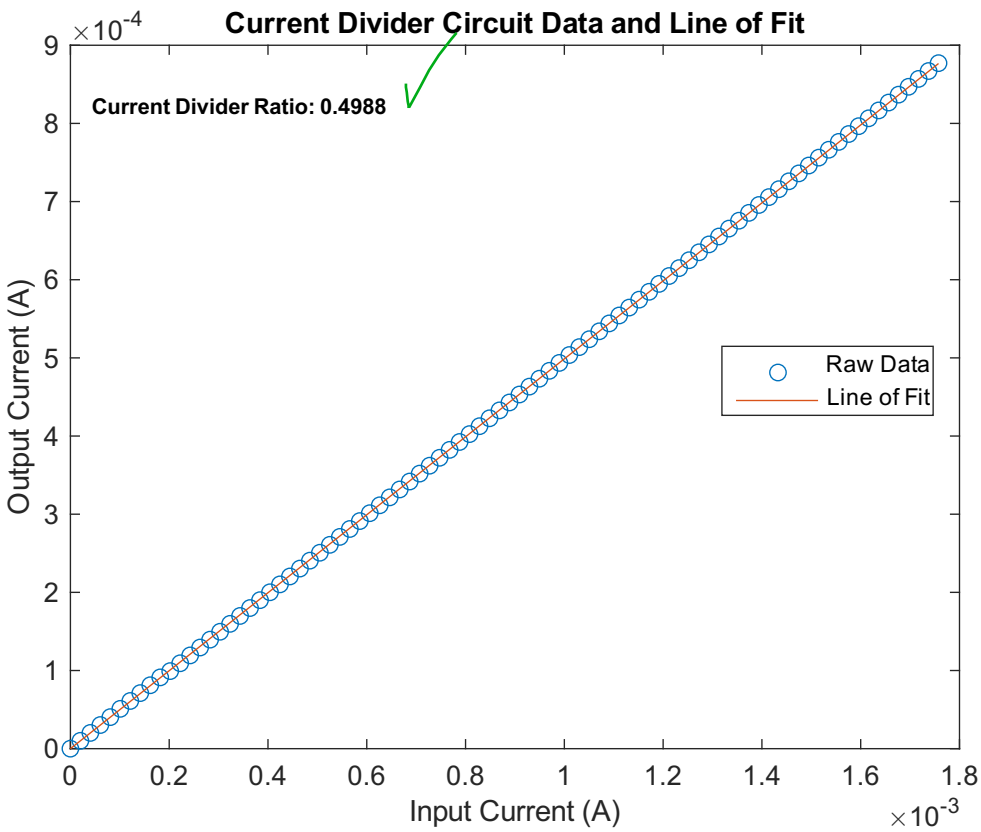

Figure 6. Input and measured current as measured by the SMU, with a linear fit used to extract the Current Divider Ratio from the SMU data.

3.2. Analysis

For an ideal two-way resistive current divider consisting of two equal resistances, the theoretical divider ratio is

$$\frac{I_{\text{out}}}{I_{\text{in}}} = \frac{R_2}{R_1 + R_2}. \tag{1}$$

From the linear fit of the measured output current as a function of input current, the slope of the best-fit line was found to be approximately 0.4988, which represents the experimentally measured current divider ratio. This value is very close to the theoretical ratio of 0.5, corresponding to a relative error of approximately 0.24%.

3.3. Discussion

The resistance from the resistor array that we used for this experiment was on average 9.9552125 kΩ with a standard deviation of 0.009909 kΩ. If we make a resistive current divider using resistors with the average value of the resistances and adding or subtracting a standard deviation from it, we get a current divider ratio that is very close to the one we measured.

$$\frac{I_{\text{out}}}{I_{\text{in}}} = \frac{R_{\text{avg}} + \sigma}{(R_{\text{avg}} - \sigma) + (R_{\text{avg}} + \sigma)} = \cdots = 0.4995$$

This means that the discrepancy with the resistance values matches the discrepancy observed through the current divider ratio. Although the calculated value should encompass most combinations of resistors using the resistor array chip, there are resistances outside this range and explain why our measured divider ratio is slightly off from the ratio calculated.

4. Experiment 4: R-2R Ladder Network

4.1. Results

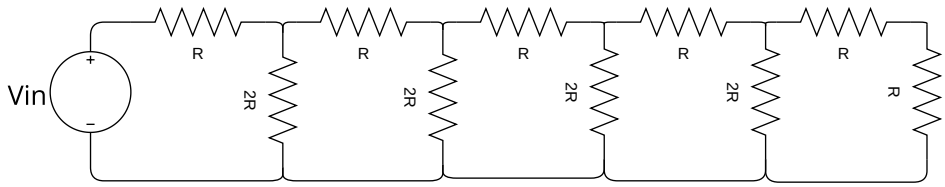

Figure 7. The schematic for the setup we used in Experiment Four.

For this experiment, we used one channel of the SMU to apply a source voltage and another channel to sequentially measure the current through each of the 4 branches of the R-2R ladder network as noted by the above circuit diagram. We then used MATLAB to create a linear fit on this data. We then plotted the theoretical and measured currents as a function of position in Figure 8.

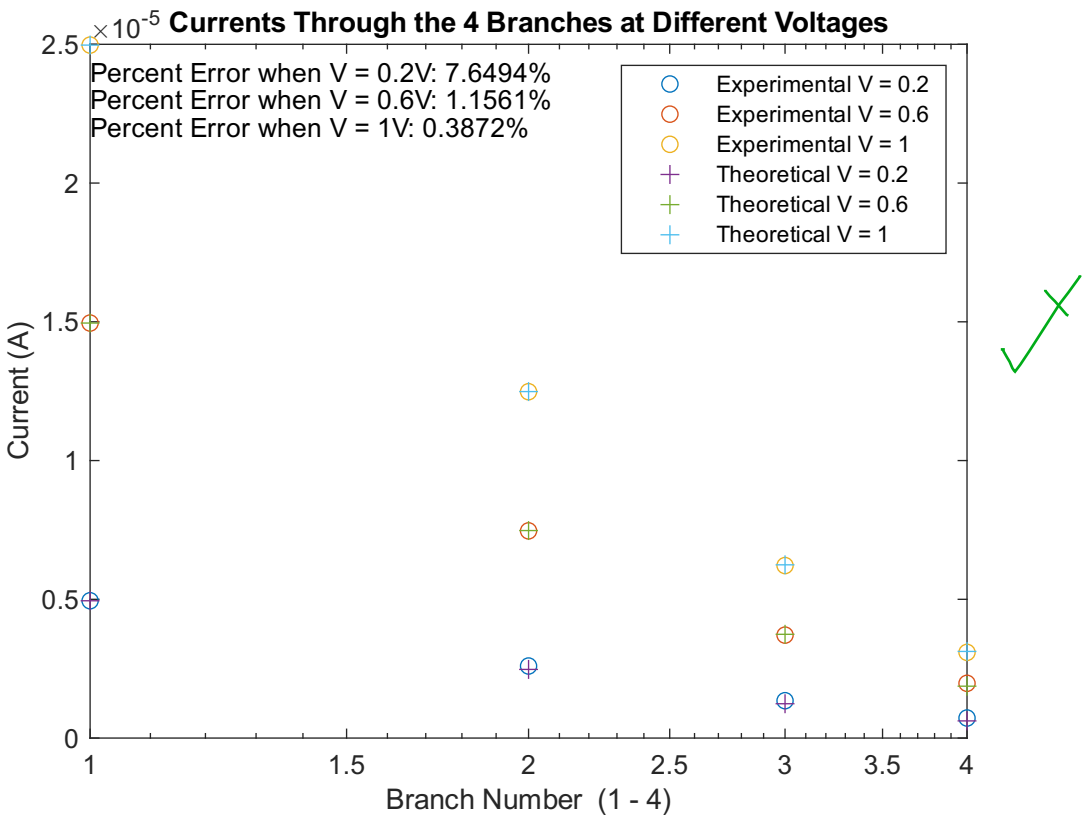

Figure 8. Input and measured current as measured by the SMU, with a linear fit used to extract the Current Divider Ratio from the SMU data.

4.2. Analysis

The currents vary between positions as we expect. We expect the currents to exponentially decrease as the branch number increases, assuming that the branch number starts at 1 closest to the input voltage source. This relationship is explained by the following equation.

$$I_n = \frac{1}{2^{n+1}} \cdot \frac{V_{\text{in}}}{R}$$

4.3. Discussion

The measured branch currents generally follow the exponential decrease we predicted for an ideal R-2R ladder network. The percent error between the measured and theoretical currents was 7.6494% for an input voltage of $V_{\text{in}} = 0.2\,\text{V}$, 1.1561% for $V_{\text{in}} = 0.6\,\text{V}$, and 0.3872% at $V_{\text{in}} = 1\,\text{V}$. The larger percent error at the lower input voltage is likely due to the smaller signal levels. At lower voltages, the measured branch currents are more affected by resolution limits and electrical noise. As the input voltage increased, the branch currents scaled proportionally, improving the signal-to-noise ratio of the measurements and giving significantly lower error. This is consistent with the decrease in percent error from 7.6494% at 0.2 V to 0.3872% at 1 V. Overall, the decrease in error with the increase in input voltage shows that the R-2R ladder network worked as predicted.