# MOS Transistor Characteristics and Simple MOS Current Mirrors

**Elias Tuthill**[1], **Henry Tejada Deras**[1] **and Anika Mahesh**[1]

[1]*Franklin W. Olin College of Engineering*

## 1. Input/Gate Characteristics

### 1.1. Results

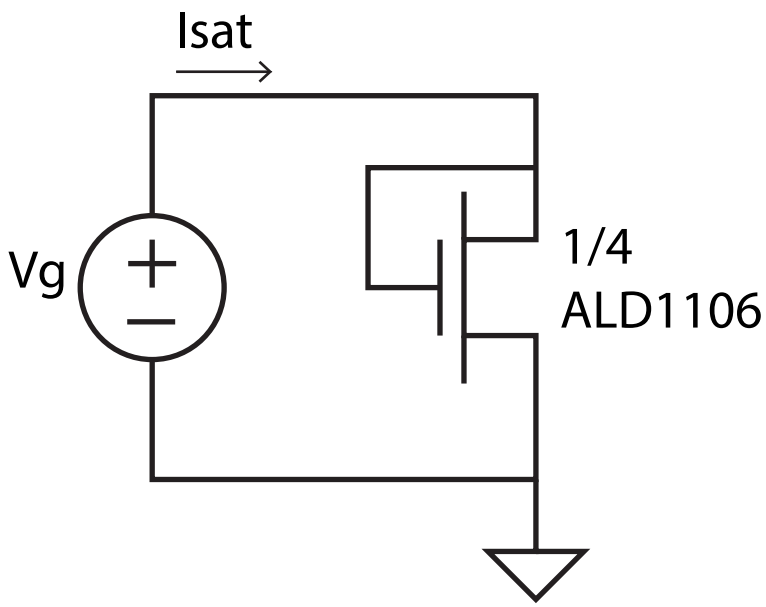


**Figure 1.** The schematic for the experimental setups used in Experiment 1. Each of the four ALD1106 transistors were used.

### 1.2. Analysis

### 1.3. Discussion

## 2. Current Transfer Characteristics

### 2.1. Results

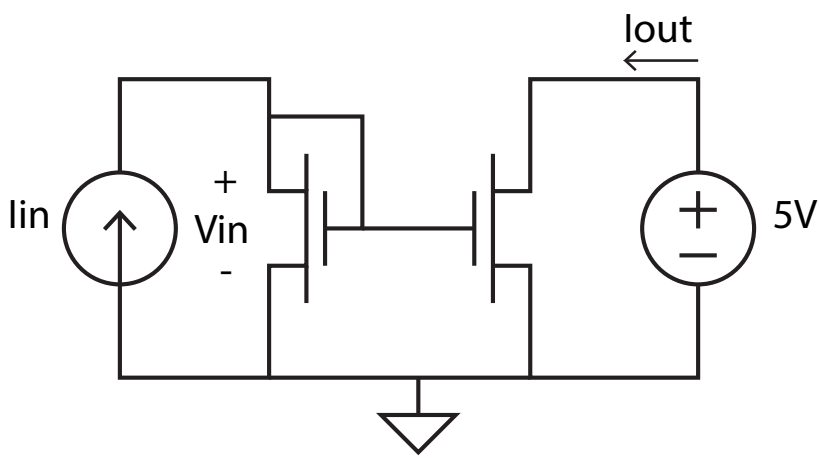


**Figure 2.** The schematic for the experimental setups used in Experiment 2. Two of four ALD1106 transistors were used.

### 2.2. Analysis
### 2.3. Discussion
## 3. Output/Drain Characteristics
### 3.1. Results

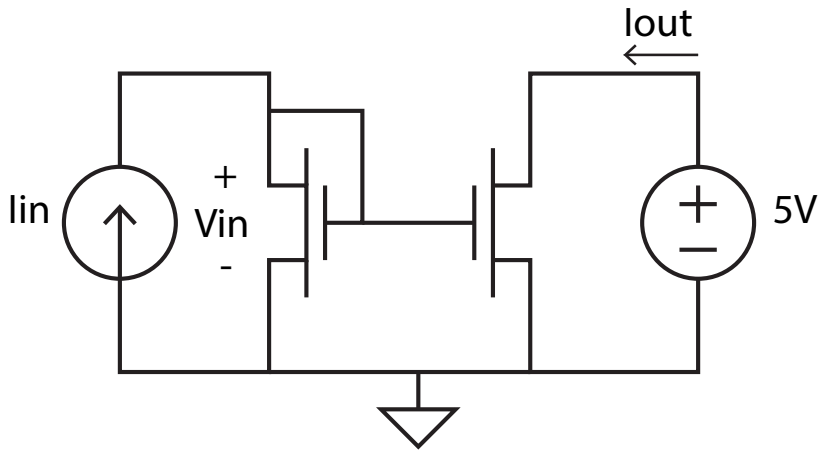


**Figure 3.** The schematic for the experimental setups used in Experiment 3. Two of four ALD1106 transistors were used.

### 3.2. Analysis
### 3.3. Discussion