Intro Microelectronic Circuits with Laboratory

Resistors and Diodes

Henry Tejada Deras[1], **Anika Mahesh**[1] **and Elias Tuthill**[1]

[1]*Franklin W. Olin College of Engineering*

1. Experiment 1: Diode-Connected Transistor Characteristics

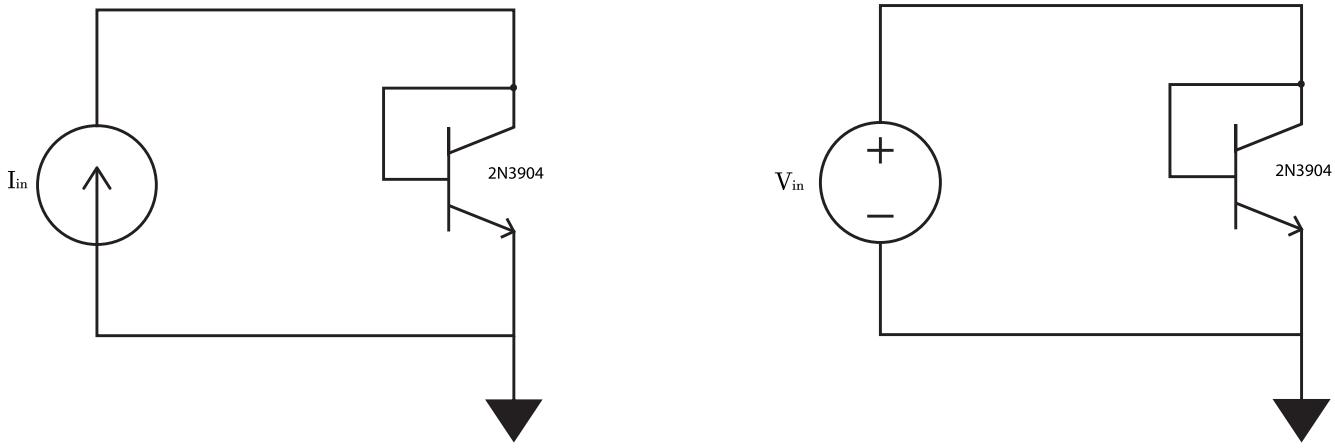

(a) Current source circuit. **(b)** Voltage source circuit.

Figure 1. The schematic for the experimental setups used in Experiment 1.

1.1. Analysis

1.2. Discussion

2. Experiment 2: Characteristics of a Resistor and Diode in Series

2.1. Results

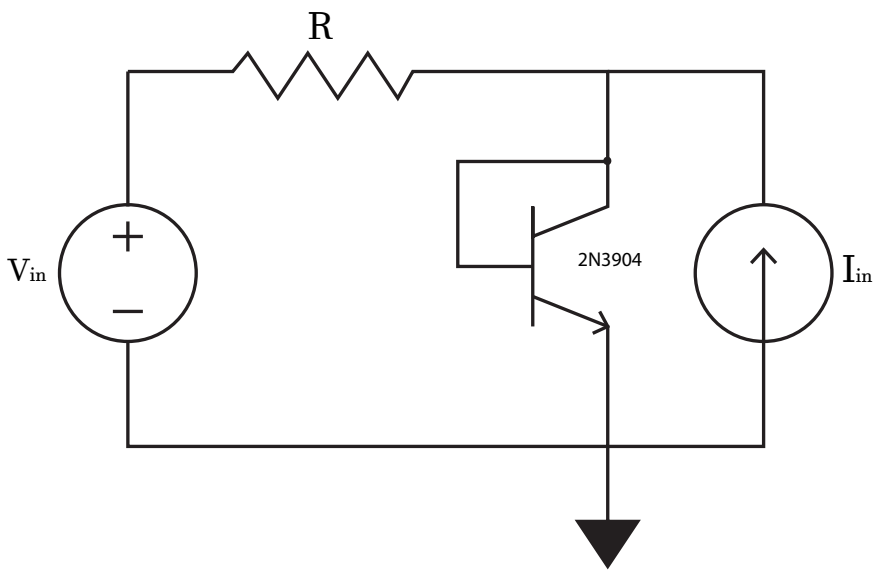

Figure 2. The schematic for the experimental setups used in Experiment 2.

2.2. Analysis

2.3. Discussion