Resistors and Bipolar Transistors

Anika Mahesh[1], **Elias Tuthill**[1] **and Henry Tejada Deras**[1]

[1] *Franklin W. Olin College of Engineering*

1. Bipolar Transistor Characteristics

1.1. Results

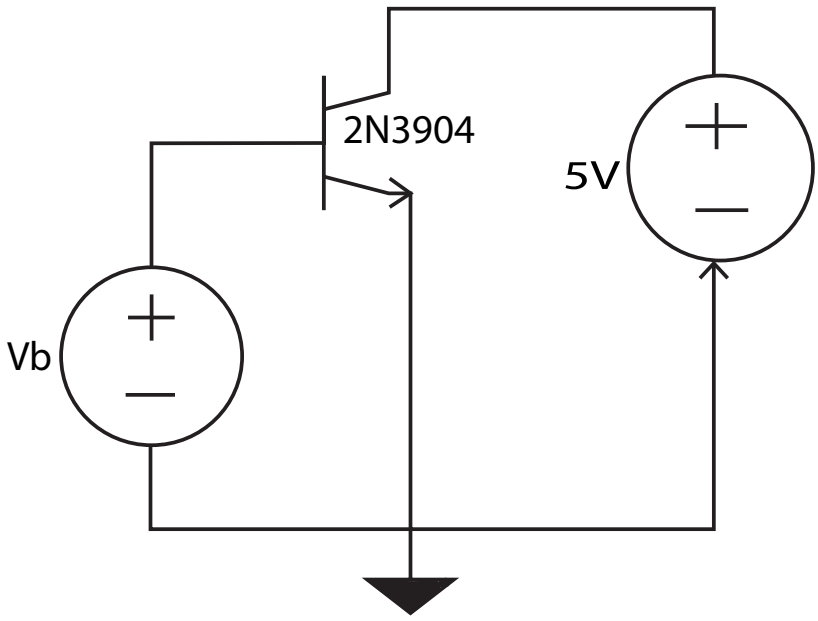

Figure 1. The schematic for the experimental setups used in Experiment 1.

We used the above setup to run this experiment. The 5 V voltage source provided a consistent 5 V and also measured the current it was supplying to maintain the 5 V. The Vb voltage source outputted a variable voltage and supplied the necessary current to maintain that voltage. The Vb voltage source allowed us to get data from a variety of base voltages for the BJT. This Vb voltage source is our base voltage which is also the base-emitter voltage of the BJT since the emitter voltage is equal to 0 V.

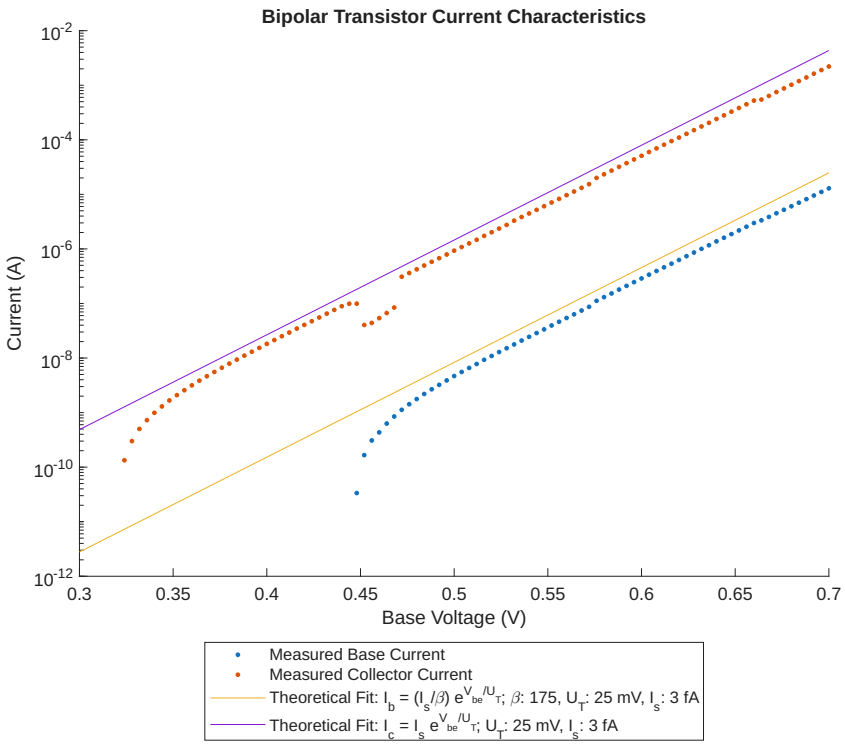

Figure 2. Base and Collector Current Characteristics of a BJT with respect to the Base Voltage (with respect to an emitter voltage of 0 V).

This graph shows us how the collector and base currents change with respect to the base voltage of the BJT. There was a weird drop in collector current around the 0.45 V base voltage mark. We think it is caused by an issue with the SMU in which some feedback the current measuring circuits received caused a misread in the actual current. Other than that, the data looks well and it looks like a mostly exponential relationship between the currents and the base voltage.

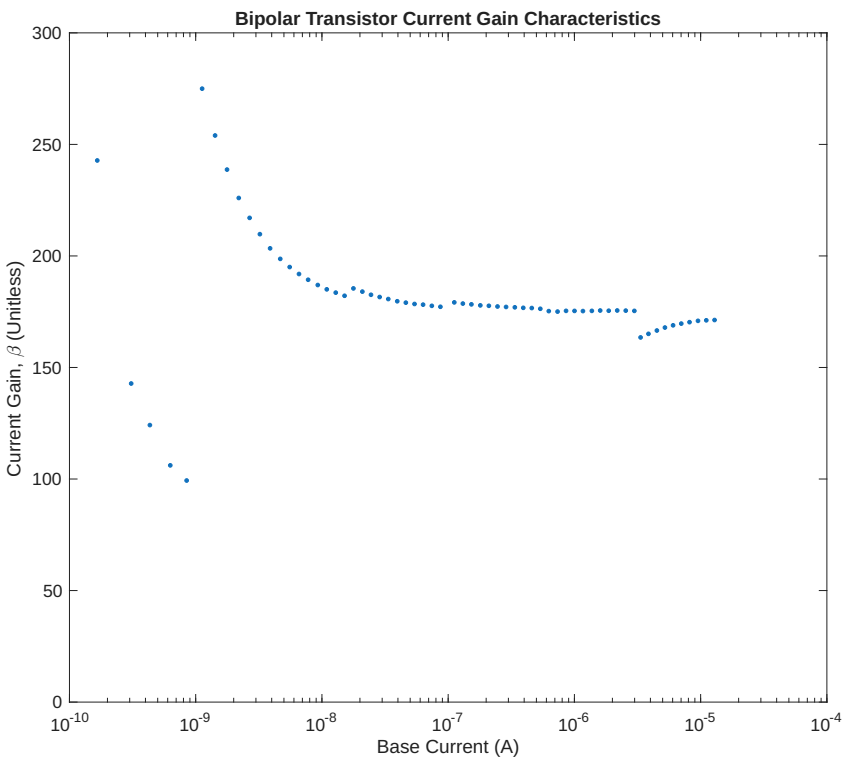

Figure 3. Current Gain with respect to Base Current.

This graph shows us the current gain, β, value with respect to the base current, I_b. There are a few discontinuities in the data due to the very small currents used and measurement error in that scale being very large due to noise and leakage currents. There was one data point around a base current of 10^{-10} that was around 3000. This data point was omitted to make the graph more readable. The current gain value

was calculated using the following equation:

$$\beta = \frac{I_c}{I_b}$$

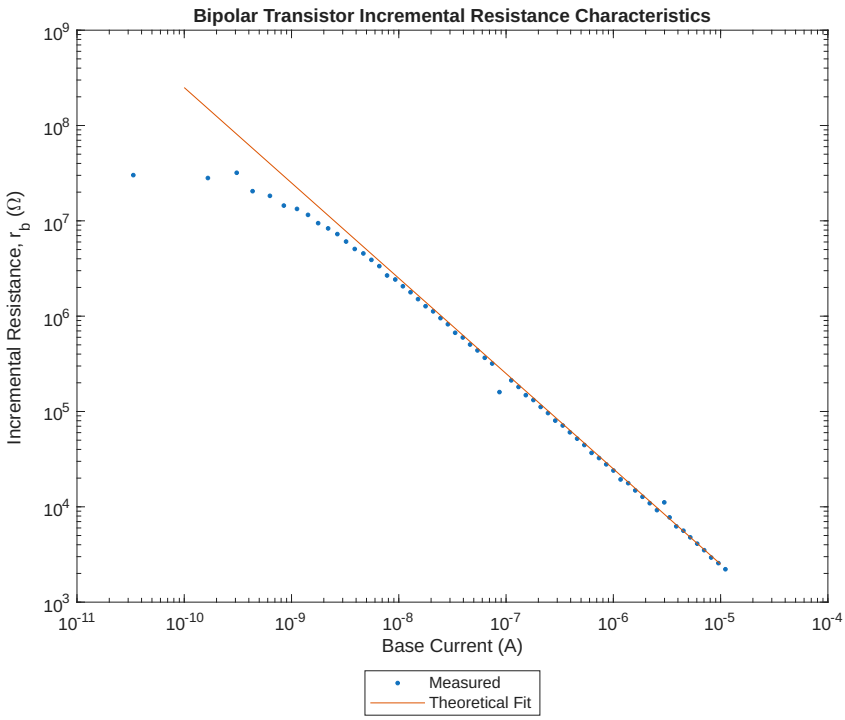

Figure 4. Incremental Resistance with respect to Base Current.

This graph shows the incremental resistance of the base terminal with respect to the base current. The graph shows that this is generally a negative exponential relationship. The resistance decreases as the current flowing through the terminal increases. The incremental resistance of the base terminal was calculated using the following equation:

$$r_b = \frac{\partial V_b}{\partial I_b}$$

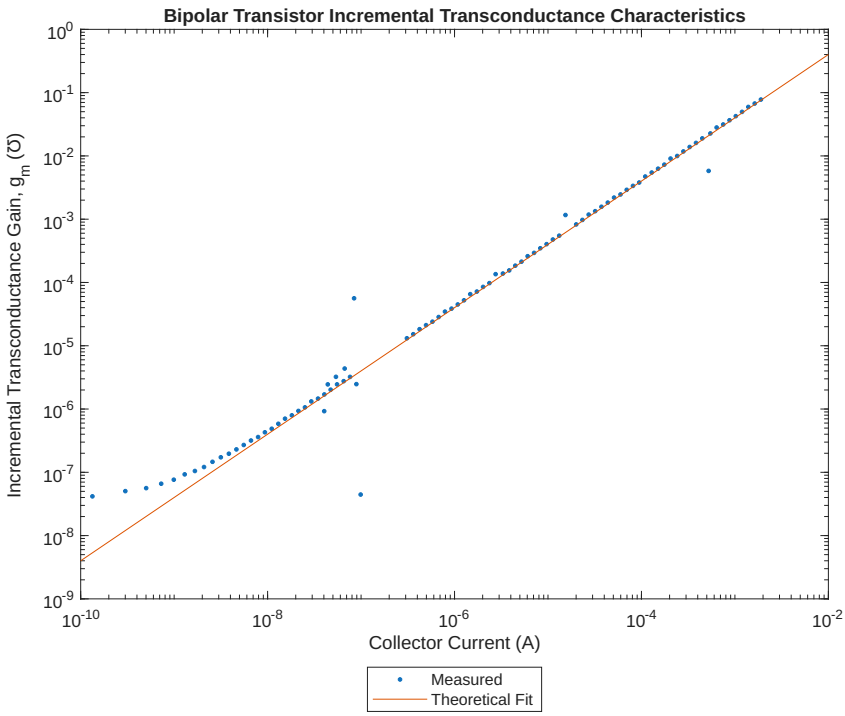

Figure 5. Incremental Transconductance with respect to Collector Current.

This graph shows the incremental transconductance of the BJT with respect to the collector current. The incremental transconductance describes how much the collector current changes for a given increase in base current. This graph shows how that incremental transconductance (also referred to as transconductance gain) changes as the collector current increases. As the collector current increases, so does the transconductance. The incremental transconductance of the BJT was calculated using the following equation:

$$g_m = \frac{\partial I_c}{\partial V_b}$$

1.2. Analysis

From Figure 2, we observe that the base and collector current follow and exponential relationship with the base voltage for most of the measured base voltage values. When the base voltage becomes very small, close to the V_{sat} value for that particular junction.
From Figure 3, we observe that the current gain with respect to the base current is relatively constant for currents greater than 10^{-8} A. For those base currents, we can reasonably assume that the current gain is constant. For smaller base currents, we can no longer make that assumption as the current gain starts to deviate significantly from the value when the base current is around 10^{-8} A.
From Figure 4, we observe that the theoretical fit matches very well to the measured data. This is especially true once the base current is greater than 10^{-8} A. For currents smaller than 10^{-8} A, the incremental resistance starts to deviate from the theoretical fit. The theoretical fit used is represented in the following equation:

$$r_b = \frac{U_T}{I_b}$$

From Figure 5, we observe that the theoretical fit matches the measured data very well for a collector current greater than 10^{-8} A. There are a few outliners throughout the data, especially around 10^{-7} A. Overall, the theoretical fit matches the measured data very well. The theoretical fit used is represented in the following equation:

$$g_m = \frac{\partial I_c}{\partial V_b}$$

1.3. Discussion

From the experiment, we observe that overall the predictions made by the model matches pretty well for currents greater than 10^{-8} A. At currents smaller than 10^{-8} A, the data is distorted due to leakage currents in the SMU, BJT, and breadboard. The data is also distorted at those small currents due to the SMU not having enough resolution to accurately measure such small currents.

2. Emitter-Degenerated Bipolar Characteristics

2.1. Results

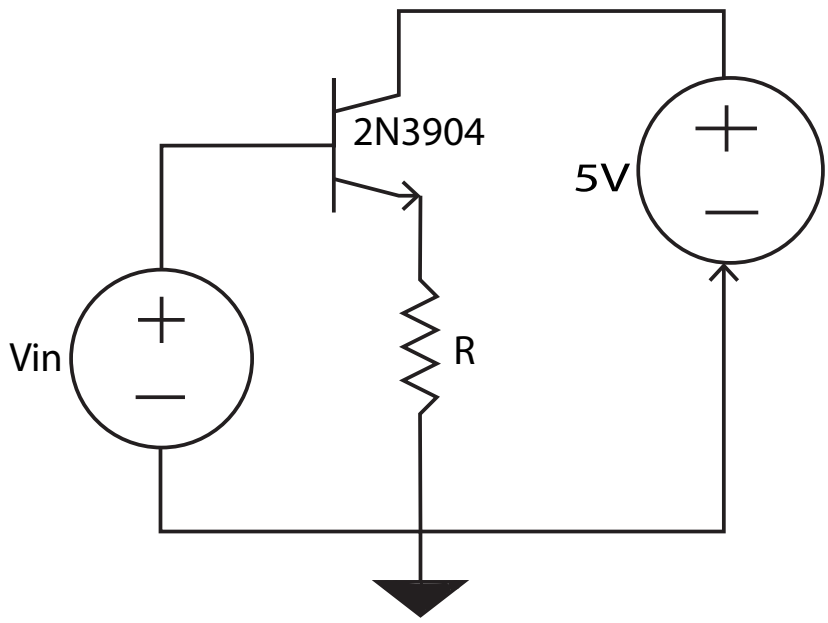

Figure 6. The schematic for the experimental setups used in Experiment 2. R values of 1kΩ, 10kΩ, and 100kΩ were used.

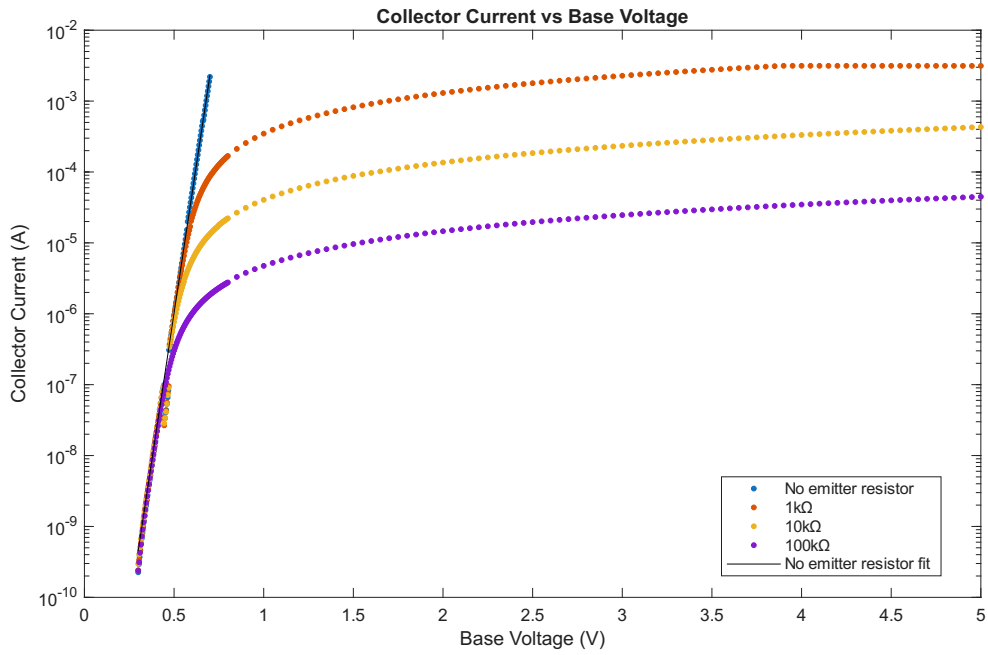

Figure 7. Collector current versus base voltage for four configurations: no emitter resistor, 1kΩ, 10kΩ, and 100kΩ. The no-resistor case includes a linear fit on a semilog plot for comparison.

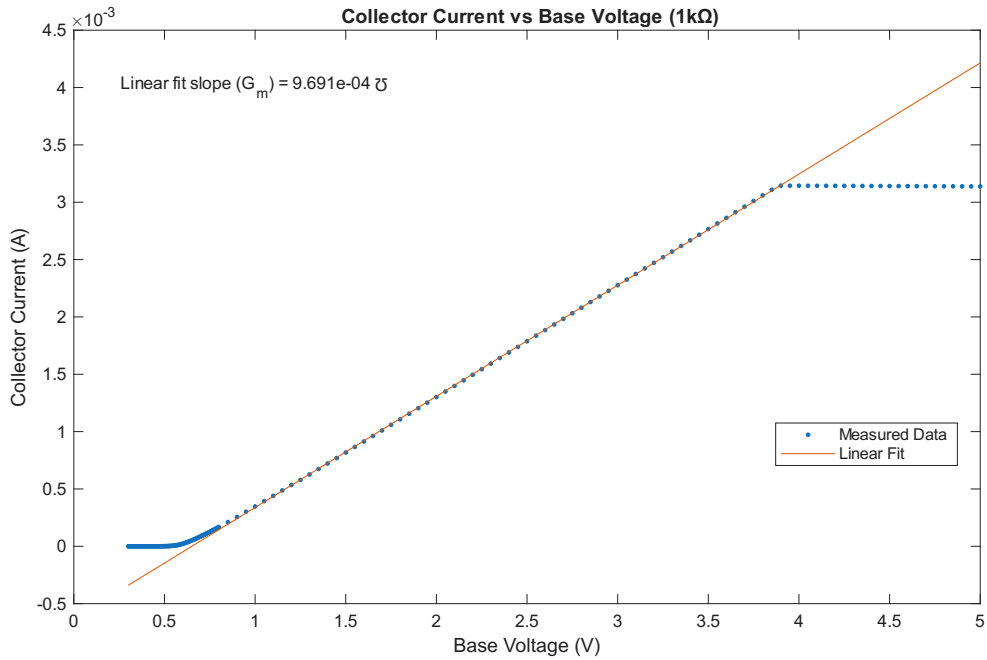

Figure 8. Collector current vs. base voltage for $R = 1\text{k}\Omega$ with a linear fit in the region where the curve becomes approximately straight. The fitted slope is 9.691×10^{-4} ℧.

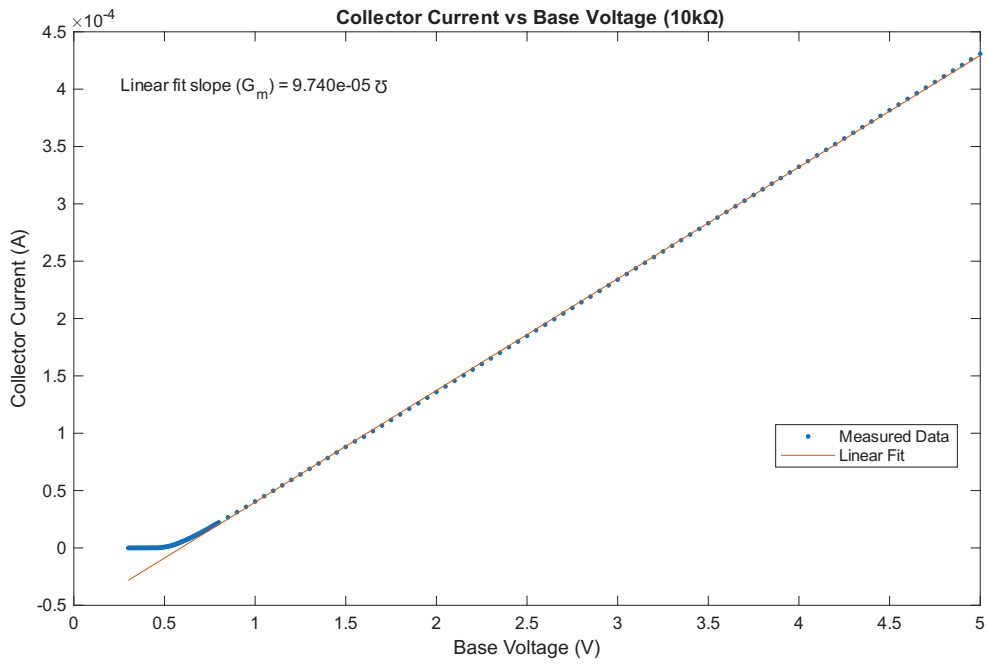

Figure 9. Collector current vs. base voltage for $R = 10\text{k}\Omega$ with a linear fit. The fitted slope is 9.740×10^{-5} ℧.

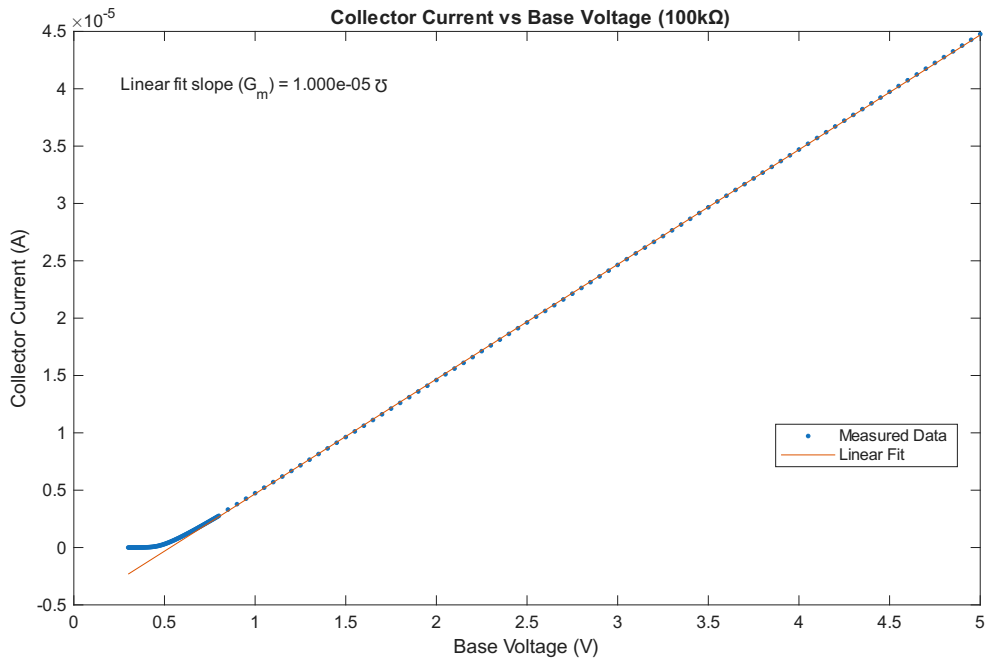

Figure 10. Collector current vs. base voltage for $R = 100\text{k}\Omega$ with a linear fit. The fitted slope is 1.000×10^{-5} ℧.

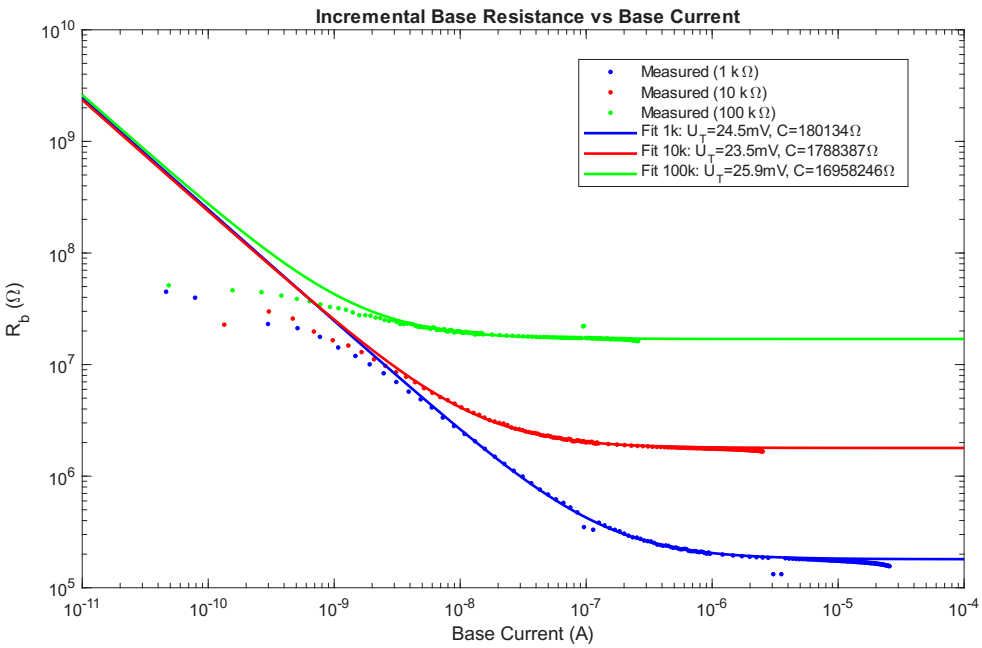

Figure 11. Incremental base resistance (R_b) as a function of base current (I_b) for emitter resistors of 1 kΩ, 10 kΩ, and 100 kΩ. The data is fitted to the model $R_b = \frac{U_T}{I_b} + C$, where U_T is a scaling constant related to the thermal voltage and $C \approx \beta R$ represents the reflected emitter resistance.

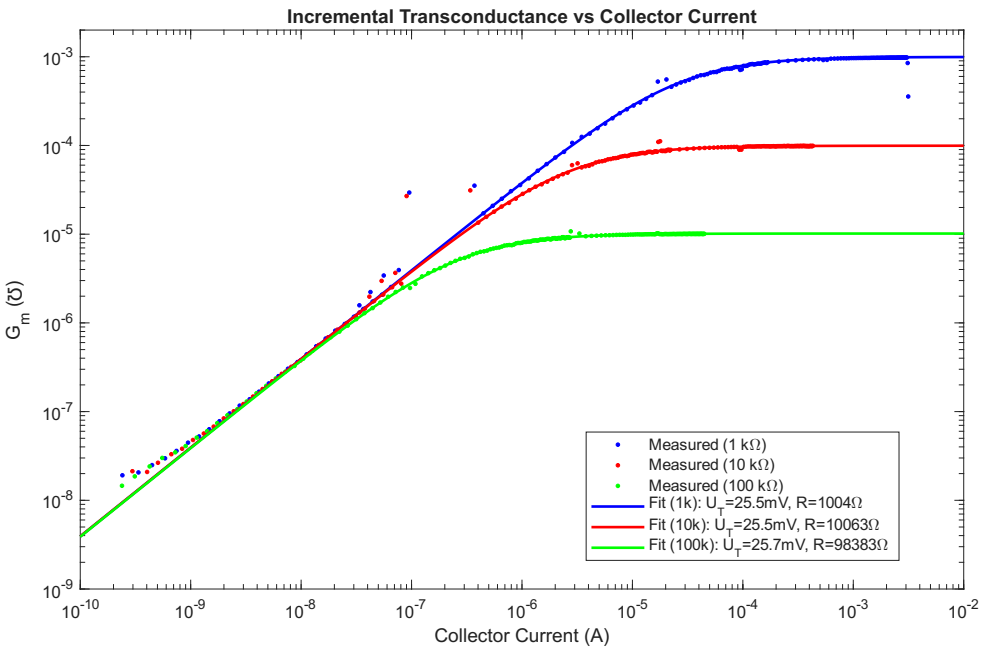

Figure 12. Incremental transconductance (G_m) as a function of collector current (I_c). The data is fitted to the model $G_m = \left(\frac{U_T}{I_c} + R\right)^{-1}$, where R is the emitter resistance and U_T/I_c represents the intrinsic small-signal emitter resistance r_e.

2.2. Analysis

The collector-current curves in Fig. 7 show that adding an emitter resistor reduces how strongly the collector current responds to changes in base voltage. With no emitter resistor, the current rises sharply as the base voltage increases. As the emitter resistance increases, the curve becomes noticeably flatter. This behavior indicates that the emitter resistor introduces local negative feedback that limits how much the collector current can change for a given change in base voltage.

Figures 8–10 quantify this behavior. Each figure shows a region where the collector current varies approximately linearly with base voltage. The slope of this region decreases by around a factor of ten each time the emitter resistor increases by a factor of ten. The measured slopes are approximately 9.7×10^{-4} ℧, 9.7×10^{-5} ℧, and 1.0×10^{-5} ℧ for $R = 1\text{k}\Omega$, $10\text{k}\Omega$, and $100\text{k}\Omega$, respectively. Because this slope corresponds to the incremental transconductance of the circuit, this scaling is consistent with the expected effective transconductance for an emitter-degenerated transistor:

$$G_{m,\text{eff}} \approx \frac{1}{R + r_e},$$

where r_e is the small-signal emitter resistance of the transistor. When the emitter resistor is much larger than r_e, this expression approaches $G_{m,\text{eff}} \approx 1/R$, which explains why the measured slopes scale inversely with the emitter resistance.

Figure 11 shows the incremental base resistance R_b as a function of base current for all three emitter resistor values. The measured R_b decreases with increasing base current, and the log-log slope becomes less negative as the emitter resistor increases. This behavior is consistent with the increase in effective input resistance caused by emitter degeneration:

$$r_{b,\text{eff}} \approx \beta(R + r_e).$$

As the emitter resistor becomes larger, the term βR begins to dominate the effective base resistance, making R_b less dependent on the base current. This causes the log–log slope of R_b versus I_b to flatten and move closer to zero as the emitter resistance increases.

Finally, Figure 12 shows that the incremental transconductance G_m increases with collector current. The log-log slopes are close to 1 for all resistor values, indicating a roughly proportional relationship between G_m and the collector current I_C. This matches the intrinsic transistor relationship between transconductance and collector current, which remains approximately proportional even when emitter degeneration is present.

2.3. Discussion

Emitter degeneration introduces local negative feedback into the transistor circuit, and the measured data clearly shows its effects. Increasing the emitter resistance reduces the slope of the I_C–V_B characteristics, which limits the transconductance gain of the transistor by forcing the emitter voltage to change whenever the base voltage does, effectively reducing the base terminal's ability to alter the collector current[cite: 85]. At the same time, the effective base resistance increases due to the additional resistance reflected into the base by the transistor gain.

The measurements also demonstrate that the transconductance curves shift downward as the emitter resistor increases, while maintaining an approximately proportional relationship between G_m and I_C. Overall, the experimental data follows the expected theoretical trends for an emitter-degenerated bipolar transistor. Errors at very small currents are most likely due to SMU resolution limits and leakage currents in the measurement setup.

3. Follower Voltage Transfer Characteristics

3.1. Results

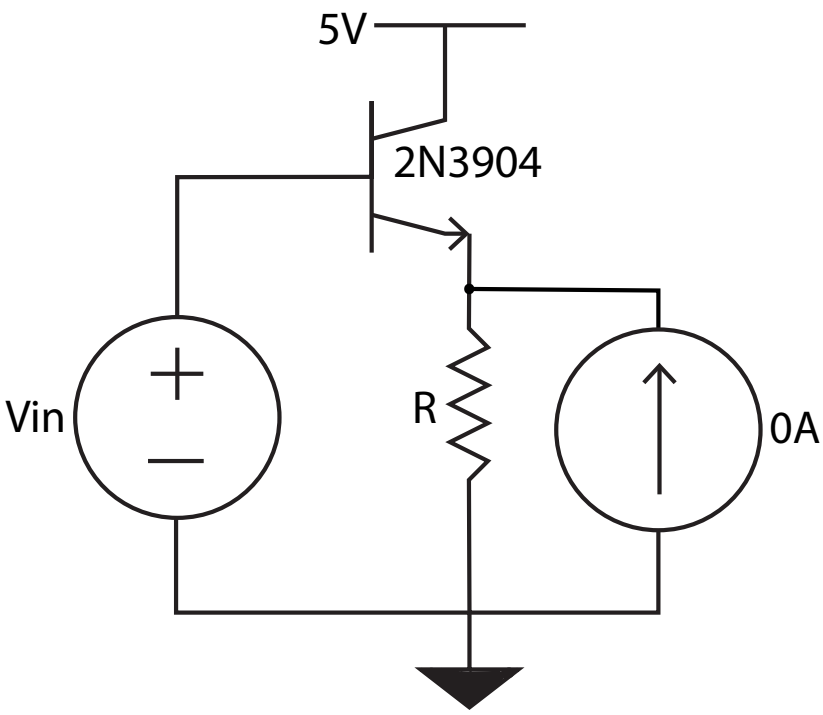

Figure 13. The schematic for the experimental setups used in Experiment 3. An R values of 1kΩ was used.

After connecting the diode-connected transistor in the emitter-follower configuration as shown in Figure 13, we measured the voltage transfer characteristic (VTC) of the circuit by sweeping the input voltage (Vin) and recording the corresponding output voltage (Vout). The VTC was plotted as Vout versus Vin, and a theoretical fit was also included for comparison. The plot is shown in Figure 14.

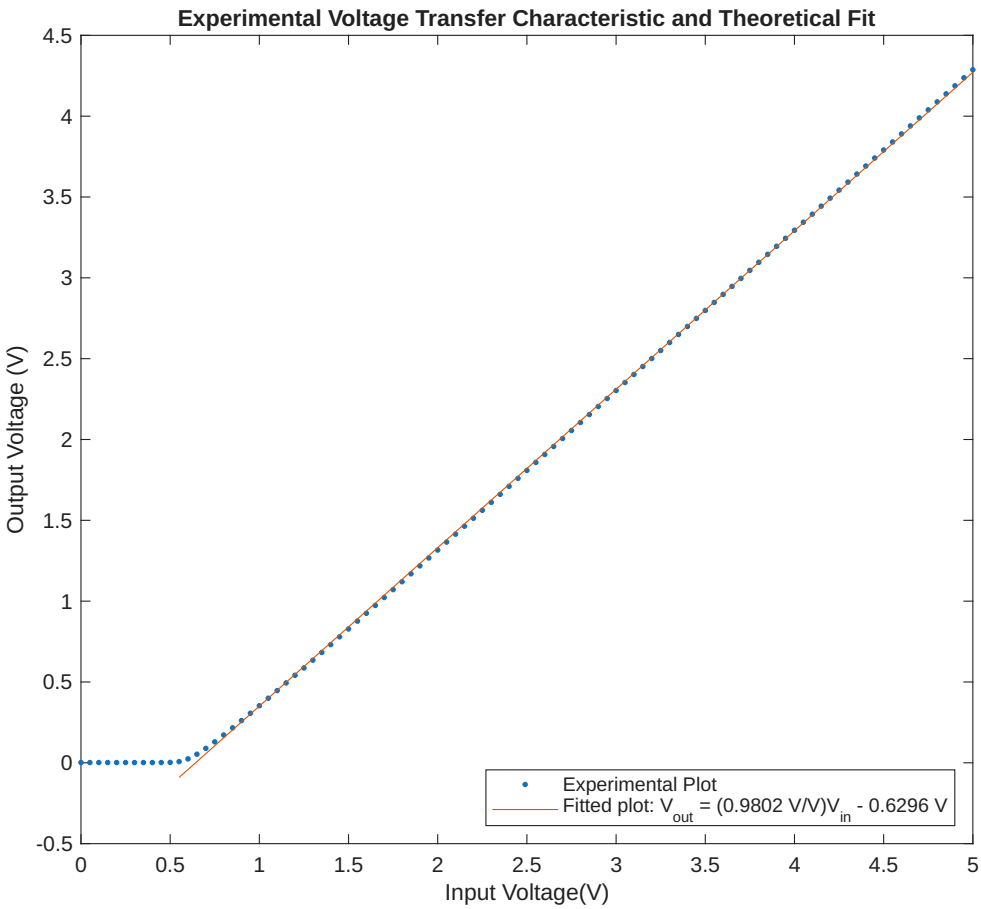

Figure 14. Plot showing the emitter-follower's voltage transfer characteristic (VTC), which is a plot of Vout as a function of Vin, along with a theoretical fit.

3.2. Analysis

The difference between Vin and Vout remains close to constant as shown by the linear portion of the VTC. The average difference can be calculated to be 0.6799V. The difference between Vin and Vout in the emitter-follower configuration is determined by the threshold voltage of the BJT. This is determined by the materials the BJT is made out of, in this case it is Silicon which has a threshold voltage.

3.3. Discussion

The incremental voltage gain (Av) of the emitter follower can be calculated using the formula: Av = dVout/dVin. From the VTC plot, we can determine the slope of the curve at different points to find the incremental voltage gain which was 0.9802. The gain of the emitter follower is expected to be close to 1. However, due to the presence of the diode-connected transistor and the slight error in the smu, the actual gain is slightly less than 1.

4. Inverter Voltage Transfer Characteristics

4.1. Results

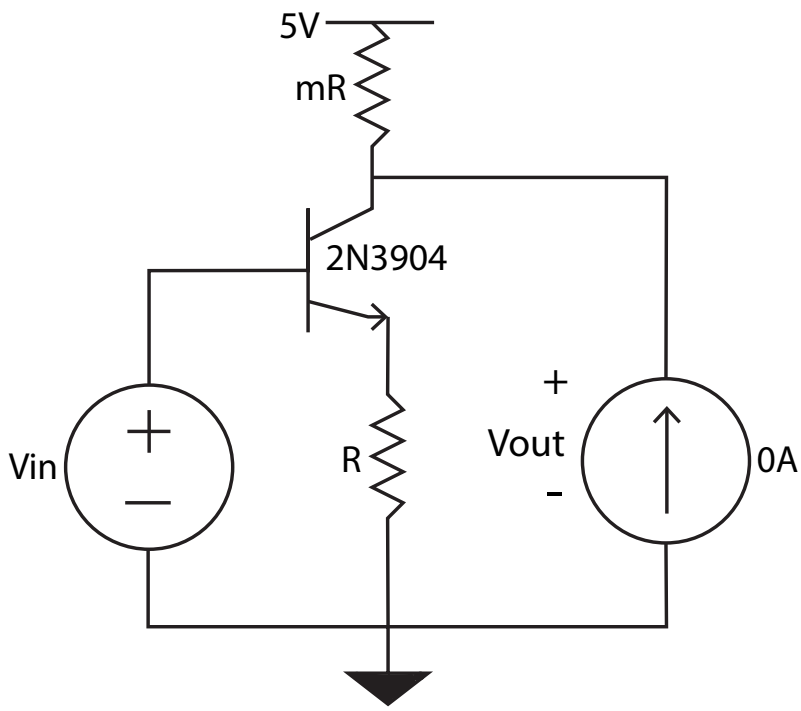

Figure 15. The schematic for the experimental setups used in Experiment 4. An R value of 1 kΩ, and mR values of 10 kΩ, 5 kΩ, and 2 kΩ were used.

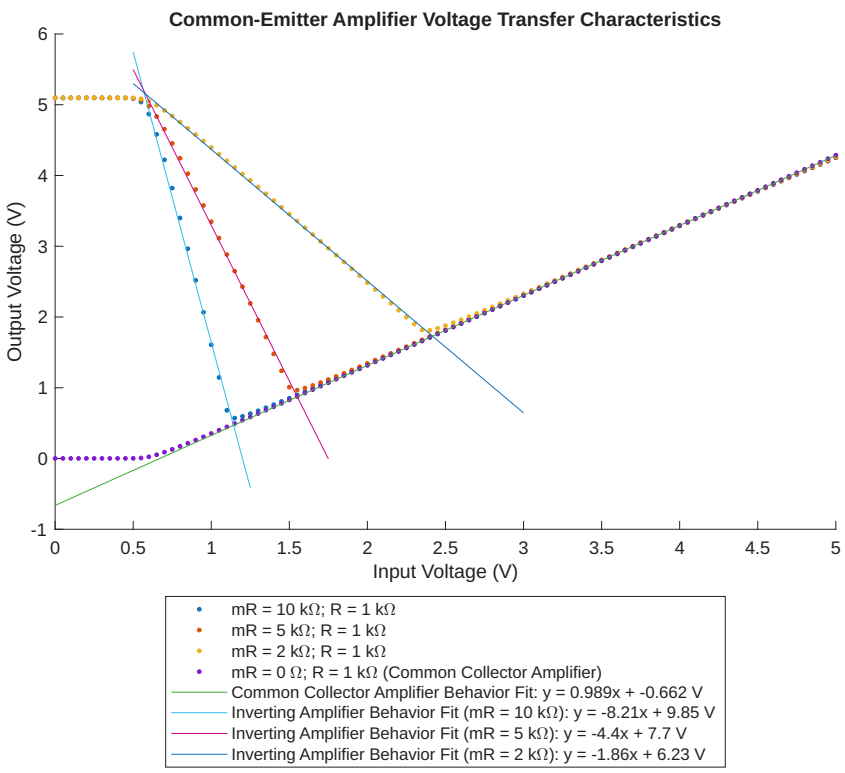

Figure 16. Voltage Transfer Characteristic of a Common-Emitter Amplifier.

In the graph above, we observe that the common-emitter amplifier circuits all reach the common-collector amplifier behavior line and then start to follow that line for all subsequent voltages. The difference between the circuits is shown by the steepness of the inverting amplification

done by the circuit where a 10:1 ratio has a large gain over a small range of voltages and a 2:1 ratio has a comparatively small gain over a larger range of voltages.

4.2. Analysis

When the mR resistor is equal to 10 kΩ, the incremental voltage gain is about -8.2. This is very close to the 10:1 ratio between the mR and R resistors. This implies that this ratio is the cause of the negative voltage gain of the circuit.
When the mR resistor is equal to 5 kΩ, the incremental voltage gain is about -4.4. Again this is very close to the 5:1 ratio between the mR and R resistors.
When the mR resistor is equal to 2 kΩ, the incremental voltage gain is about -1.9. This is also very close to the 2:1 ratio between the mR and R resistors.

4.3. Discussion

Based on the fitted lines and data, we can conclude that the ratio between the mR and R resistors is the cause of the incremental voltage gain of the circuit. The discrepancies observed in the data likely come from the tolerances of the resistors which is $\pm$ 5%.