Resistors and Bipolar Transistors

Anika Mahesh[1], **Elias Tuthill**[1] **and Henry Tejada Deras**[1]

[1]*Franklin W. Olin College of Engineering*

1. Bipolar Transistor Characteristics

1.1. Results

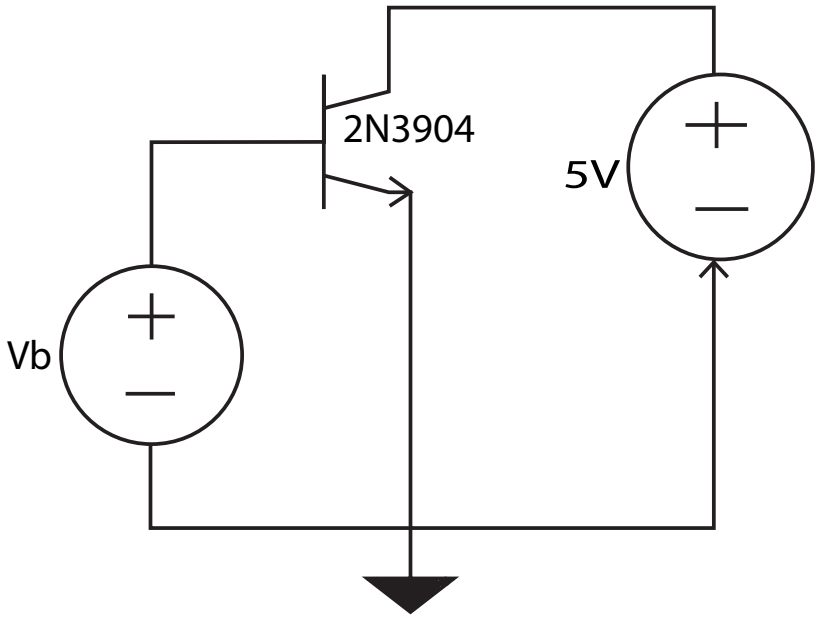

Figure 1. The schematic for the experimental setups used in Experiment 1.

1.2. Analysis

1.3. Discussion

2. Emitter-Degenerated Bipolar Characteristics

2.1. Results

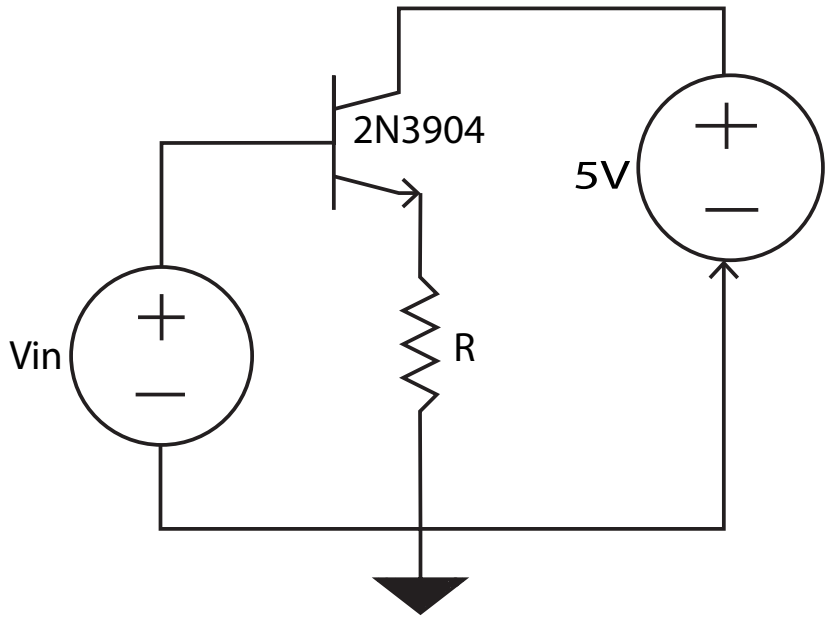

Figure 2. The schematic for the experimental setups used in Experiment 2. R values of 1kΩ, 10kΩ, and 100kΩ were used.

2.2. Analysis

2.3. Discussion

3. Follower Voltage Transfer Characteristics

3.1. Results

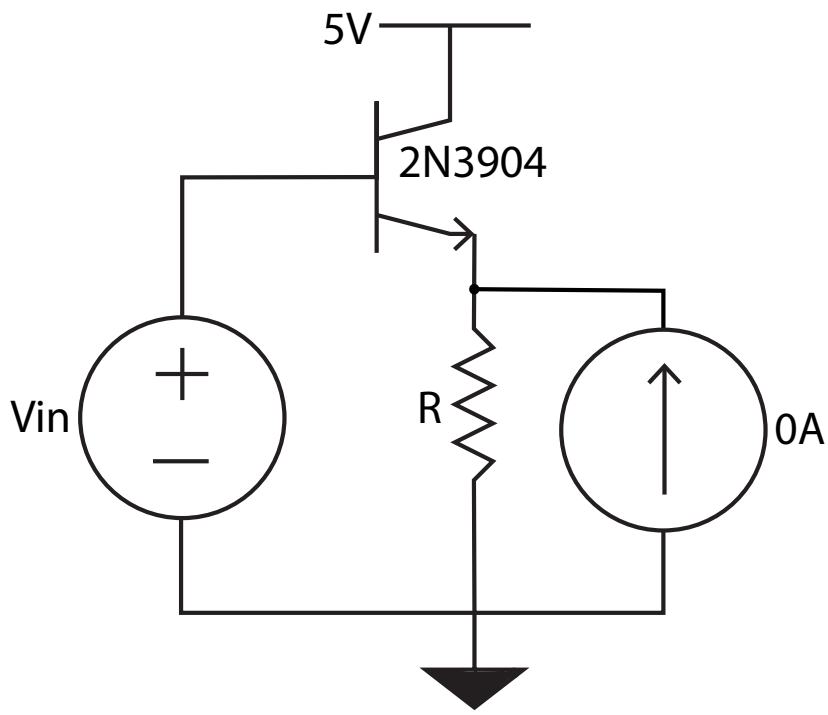

Figure 3. The schematic for the experimental setups used in Experiment 3. An R values of 1kΩ was used.

3.2. Analysis

3.3. Discussion

4. Inverter Voltage Transfer Characteristics

4.1. Results

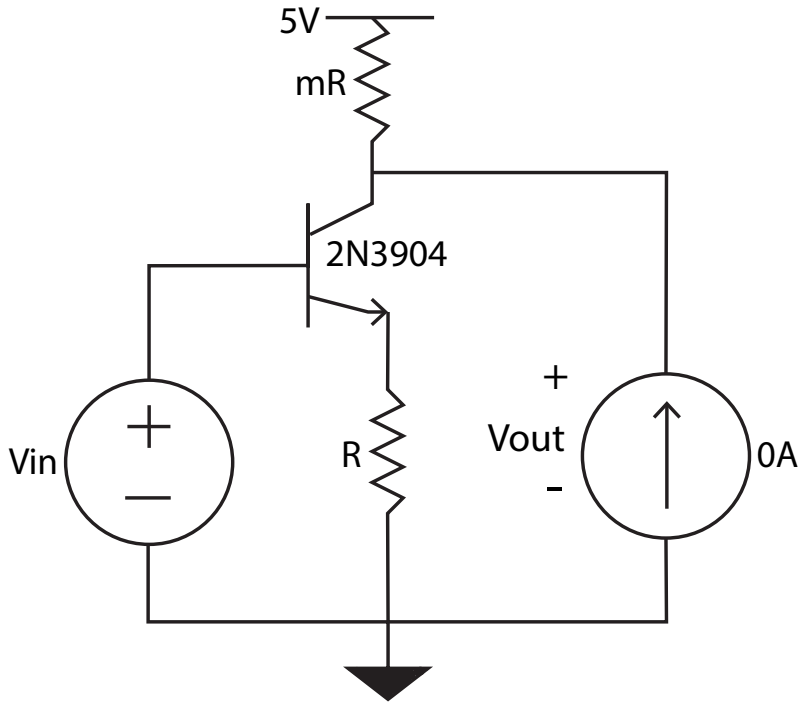

Figure 4. The schematic for the experimental setups used in Experiment 4. An R value of 1kΩ, and mR values of 10kΩ, 5kΩ, and 2kΩ were used.

4.2. Analysis

4.3. Discussion