A Simple MOS Differential Amplifier

Elias Tuthill[1] **and Henry Tejada Deras**[1]

[1] *Franklin W. Olin College of Engineering*

1. Voltage Transfer Characteristics

1.1. Results

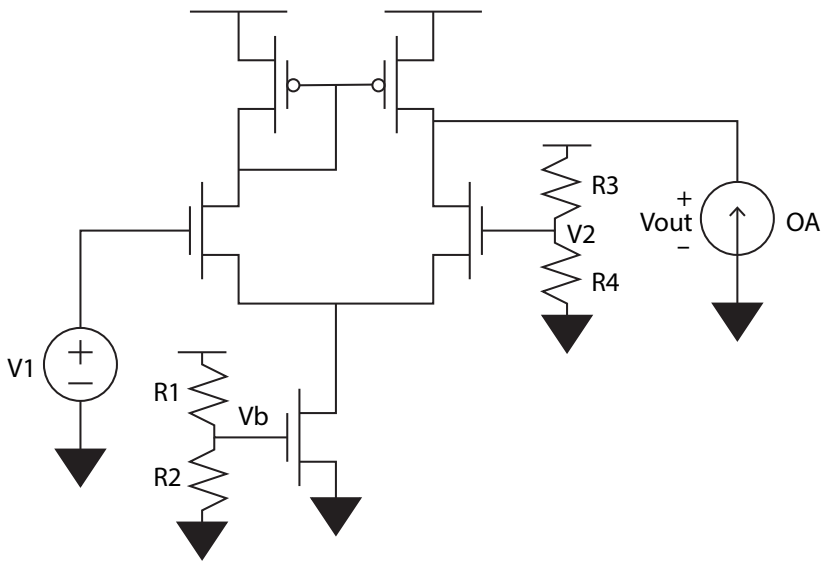

Figure 1. Schematic diagram of the simple MOS differential amplifier used to measure voltage transfer characteristics.

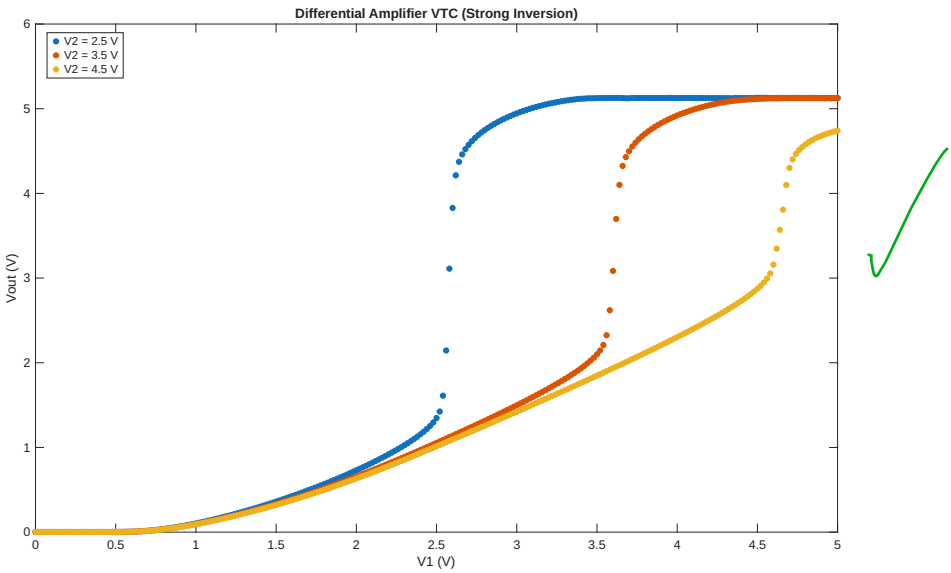

Figure 2. Voltage transfer characteristics of the differential amplifier biased in strong inversion at $V_2 = 2.5$ V, 3.5 V, and 4.5 V.

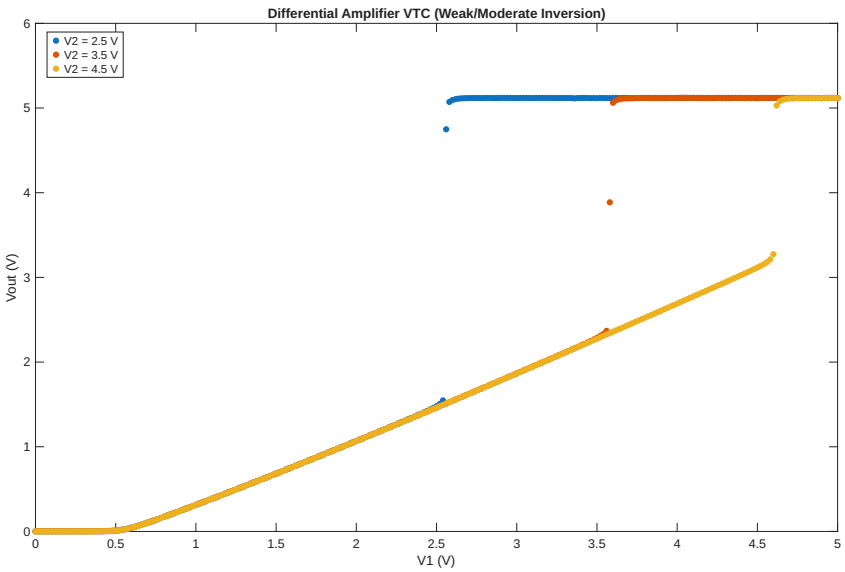

Figure 3. Voltage transfer characteristics of the differential amplifier biased in weak/moderate inversion at $V_2 = 2.5$ V, 3.5 V, and 4.5 V.

1.2. Analysis

The measured voltage transfer characteristics in both strong inversion and weak/moderate inversion show four distinct operating regions as V_1 is swept from 0 V to 5 V. Initially, V_{out} remains at around 0 V. As V_1 increases past the bias threshold, the output voltage begins to rise, proportional to $\kappa(V_1 - V_b)$. As V_1 approaches the constant reference voltage V_2, the circuit enters its high-gain region, characterized by a steep slope where a small change in V_1 produces a large change in V_{out}. Finally, when V_1 becomes greater than V_2, the output saturates and flattens out near the positive supply rail, V_{dd}.

1.3. Discussion

Comparing the two VTC plots shows a difference in behavior depending on the biasing regime. When biased in weak/moderate inversion, the transition through the high-gain region ($V_1 \approx V_2$) is noticeably sharper and more abrupt than in strong inversion. In strong inversion, this transition is smoother and spans a slightly wider range of input voltages. The plots show that the differential amplifier cannot pull its output voltage completely down to ground once it enters the active region. This limitation is caused by the tail current bias transistor (M_b) requiring a minimum voltage drop to remain saturated, thus imposing a lower limit on V_{out} of approximately $\kappa(V_1 - V_b)$.

2. Transconductance, Output Resistance, and Gain

2.1. Results

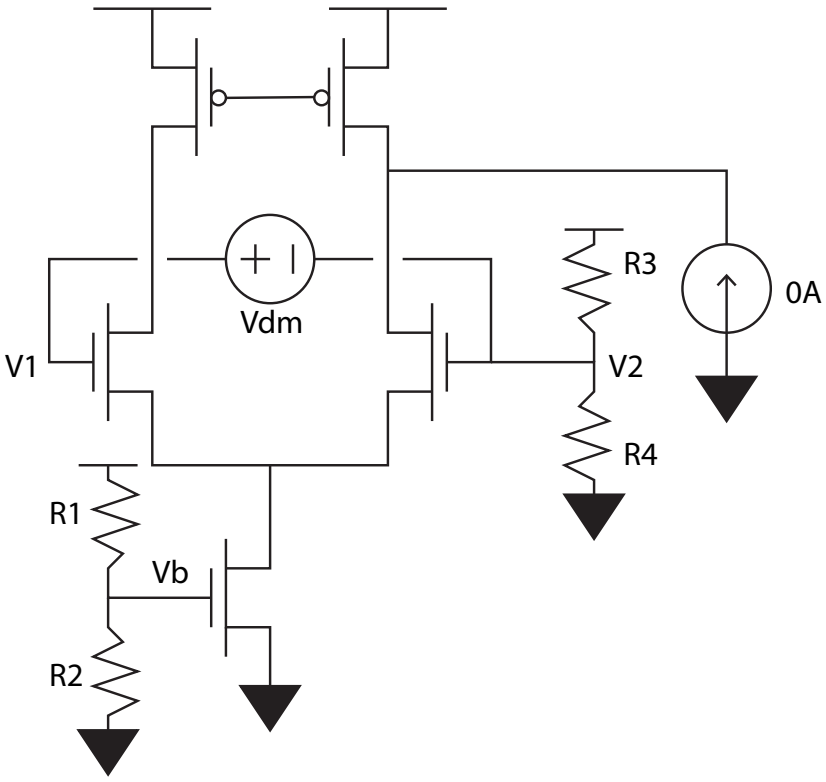

Figure 4. Schematic setup for measuring the incremental differential-mode voltage gain.

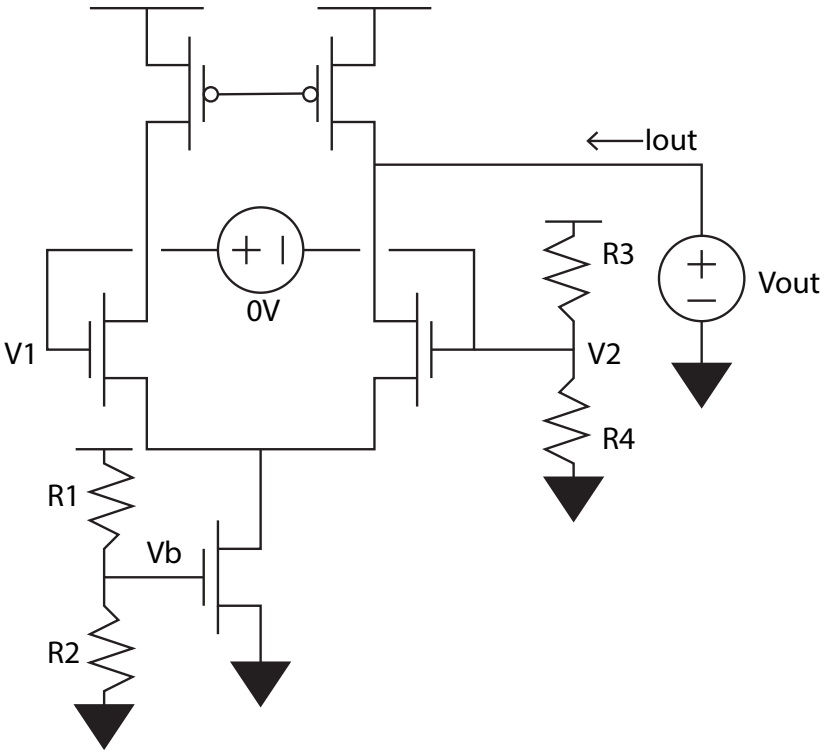

Figure 5. Schematic setup for measuring the output current to determine incremental output resistance.

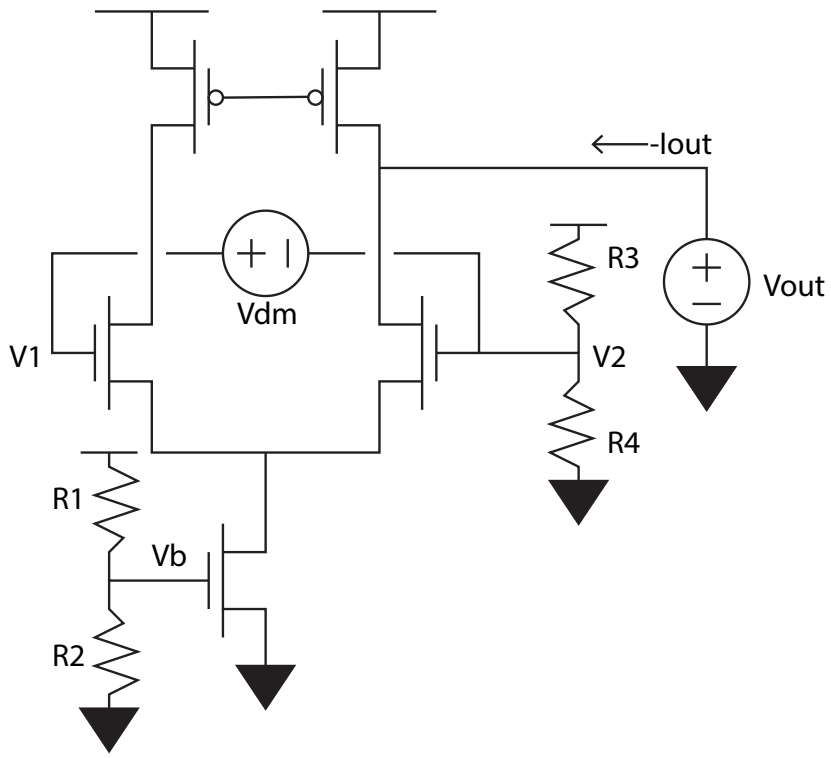

Figure 6. Schematic setup for measuring the short-circuit output current to find the incremental transconductance gain.

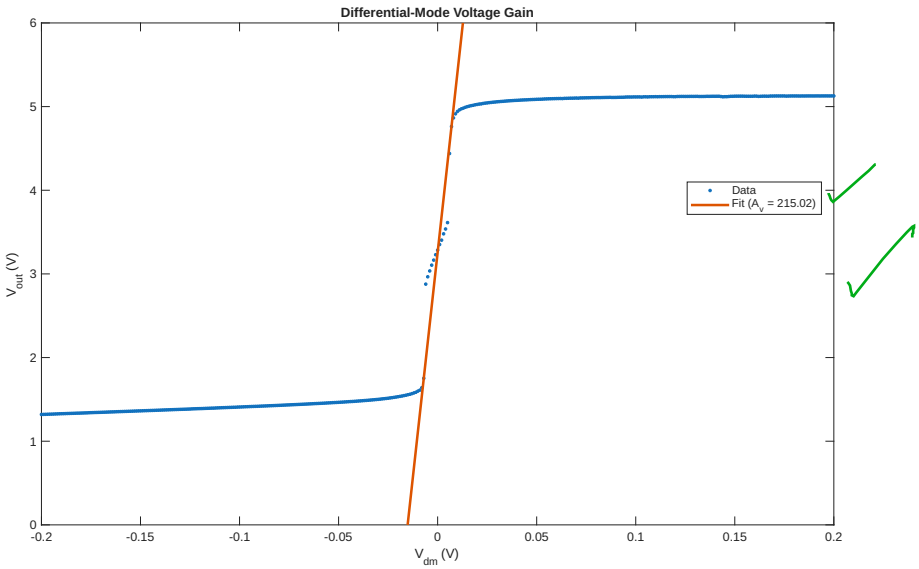

Figure 7. Plot of V_{out} versus V_{dm} showing the high-gain region of the differential amplifier. A linear fit to the steepest section gives a measured differential-mode voltage gain (A_{dm}) of 215.02.

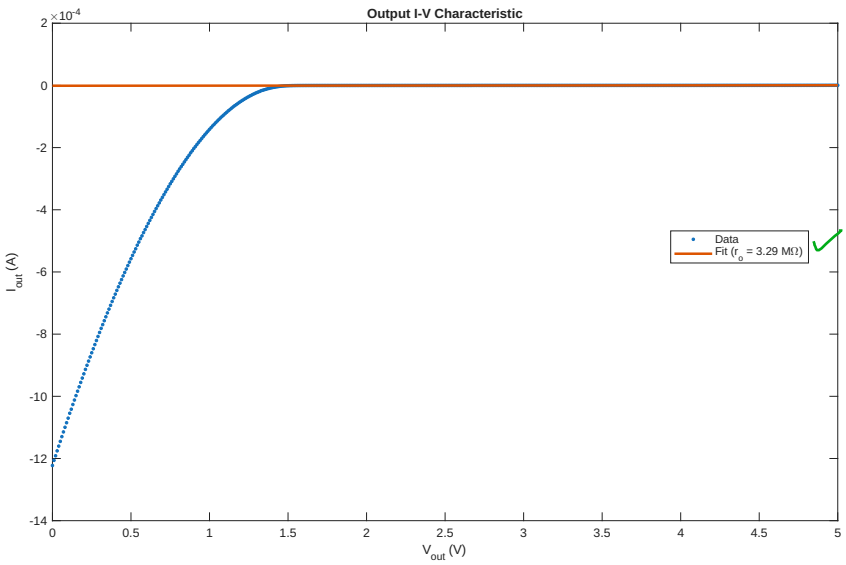

Figure 8. Output current-voltage characteristic of the differential amplifier with the differential input voltage set to zero. The linear fit to the shallow region gives an incremental output resistance (r_o) of 3.29 MΩ.

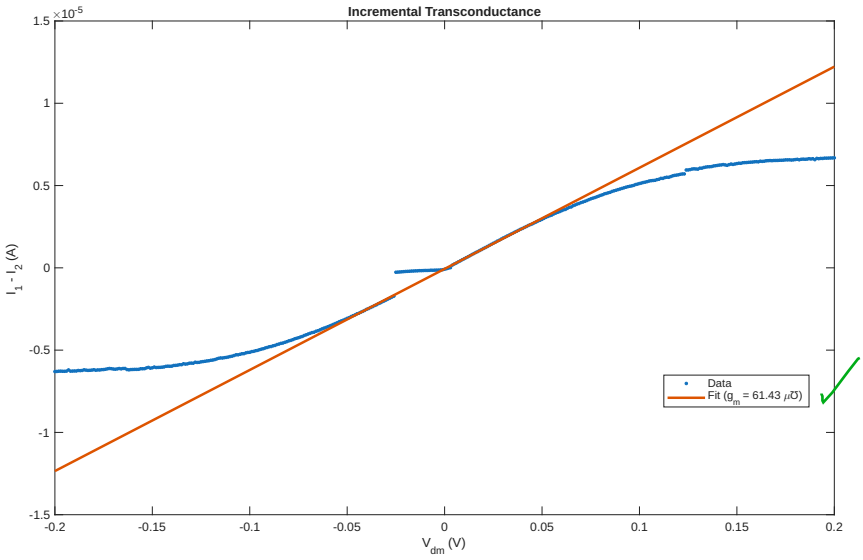

Figure 9. Incremental transconductance measurement showing the short-circuit output current versus differential input voltage. The linear fit gives a transconductance (g_m) of 61.43 μ℧.

2.2. Analysis

In this experiment, the differential-mode voltage gain (A_{dm}) was determined using two different methods. First, by sweeping V_1 around V_2 and fitting a line to the steepest section of the voltage transfer characteristic, a gain of 215.02 was determined. Next, the parameters of the amplifier's gain equation—incremental output resistance (r_o) and transconductance (g_m) were measured independently. Setting $V_{dm} = 0$ V and sweeping V_{out} gave an I-V curve where the inverse of the shallow slope gave an output resistance $r_o = 3.29$ MΩ. Finally, holding the output voltage as a constant and sweeping the differential input voltage gave a curve where the slope near $V_{dm} = 0$ V gave a transconductance $g_m = 61.43$ μ℧.

2.3. Discussion

The theoretical incremental differential-mode voltage gain can be found using the relationship $A_{dm} = R_{out} \cdot G_m$. Multiplying the output resistance (3.29 MΩ) by the transconductance (61.43 μ℧) gives a calculated gain of approximately 202.1. This computed value is close to the 215.02 gain measured from the slope of the voltage transfer characteristic. The slight error of about 6% is expected and could be caused by minor variations in the exact operating points.

3. Unity-Gain Follower

3.1. Results

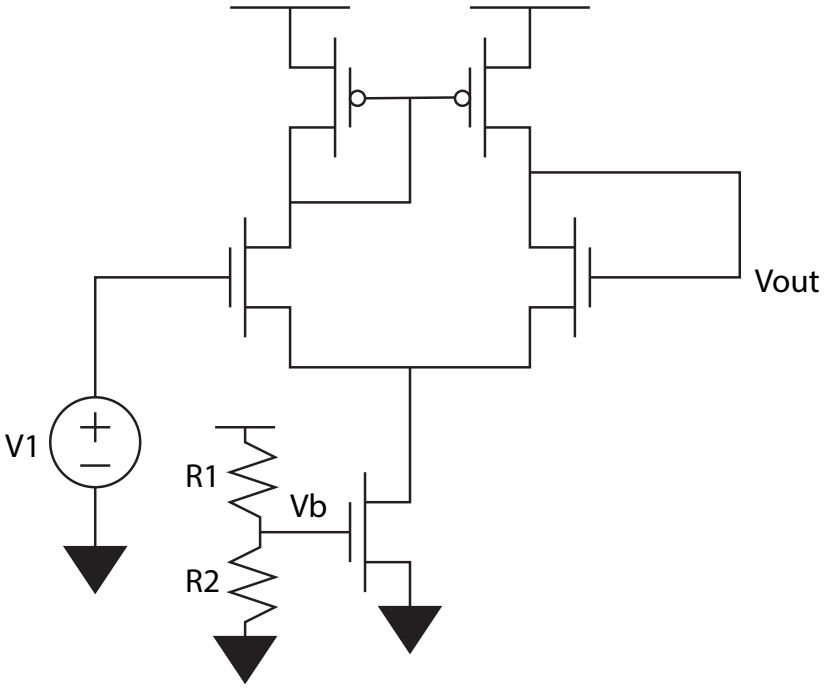

Figure 10. Schematic diagram of the differential amplifier as a unity-gain follower.

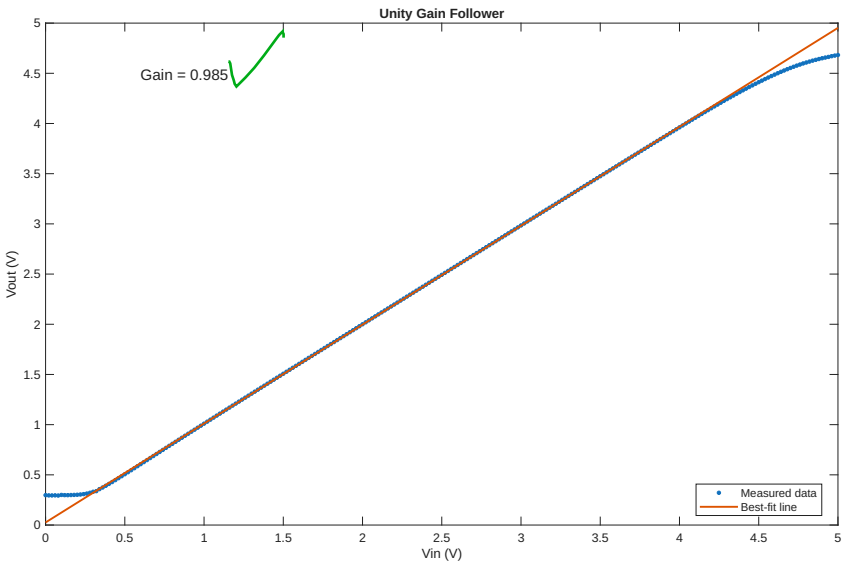

Figure 11. Voltage transfer characteristic of the unity-gain follower configuration, showing a measured incremental gain of 0.985.

3.2. Analysis

By connecting the output to the inverting input terminal, the differential amplifier was turned into a unity-gain follower. Sweeping V_{in} from rail to rail created a linear relationship between the input and output voltages over most of the operating range. To estimate the incremental gain, a line of best fit was applied to the linear portion of the measured data, excluding the regions near the voltage rails where clipping occurs. The resulting slope of the best fit line gives a measured gain of 0.985. Noticeable clipping occurs near the lower bound of the sweep (below $\approx 0.3\,\mathrm{V}$) and near the upper bound (above $\approx 4.5\,\mathrm{V}$), where the output voltage begins to differ from the linear trend.

3.3. Discussion

The measured incremental gain of 0.985 indicates that the circuit functions pretty effectively as a voltage follower, since the gain is close to the ideal value of 1. The small difference from unity gain is caused by the finite open-loop gain of the differential amplifier. Because the open loop gain is not infinite, the closed loop gain of the follower cannot be exactly one. The clipping observed near the voltage rails reflects the compliance limits of the amplifier. When the input voltage is near ground or V_{dd}, the transistors leave the saturation region required for

proper operation. As a result, the amplifier can no longer track the input voltage accurate;y, causing to the observed difference from linear behavior near the extremes of the sweep.