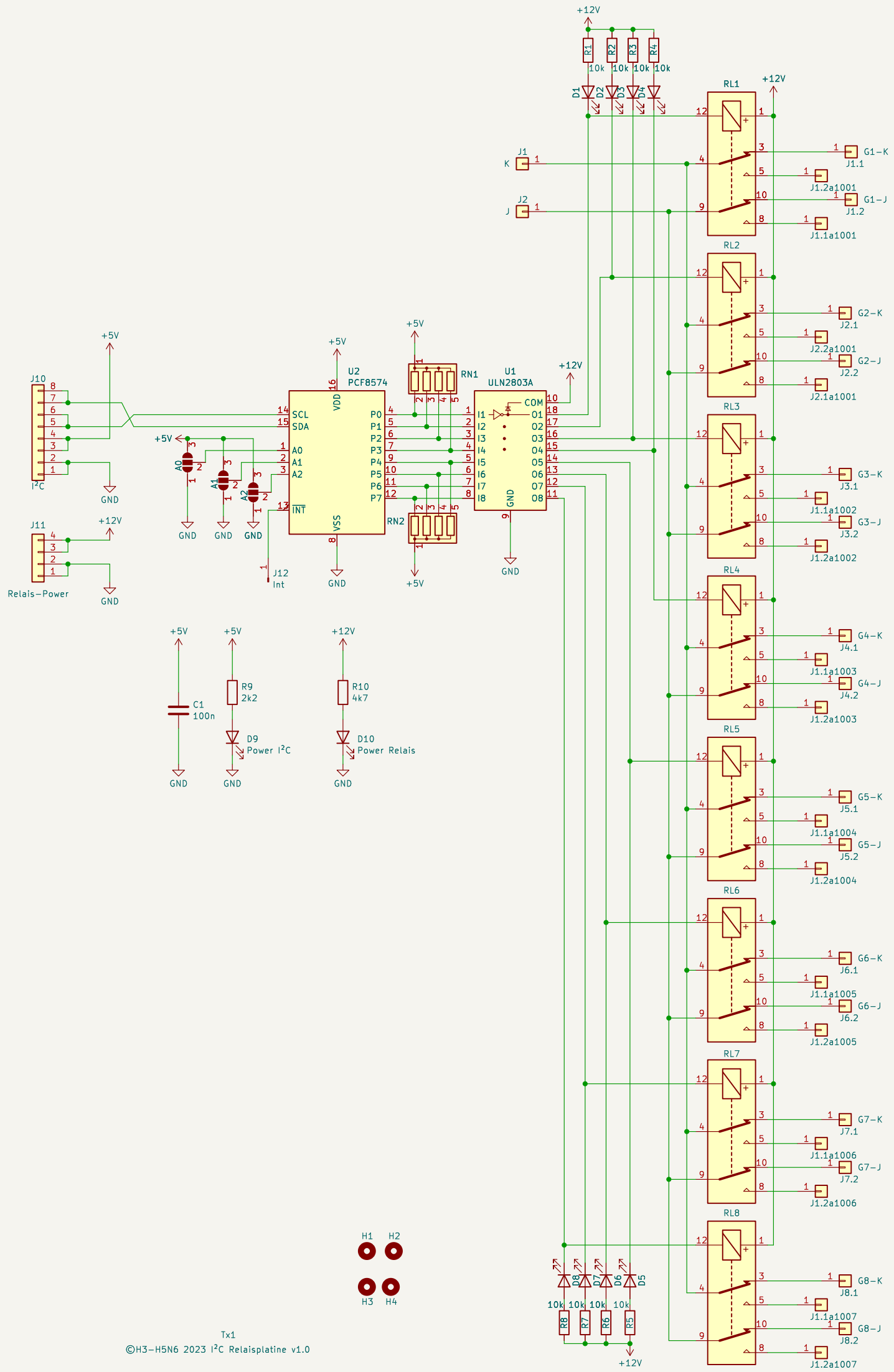

Sheet: /
File: Relaisplatine_I2C.kicad_sch

Title: I²C 8-fach Relaisplatine

Size: A3	Date: 2023-12-13	Rev: v1.0
KiCad E.D.A. kicad-cli 7.0.9		Id: 1/1