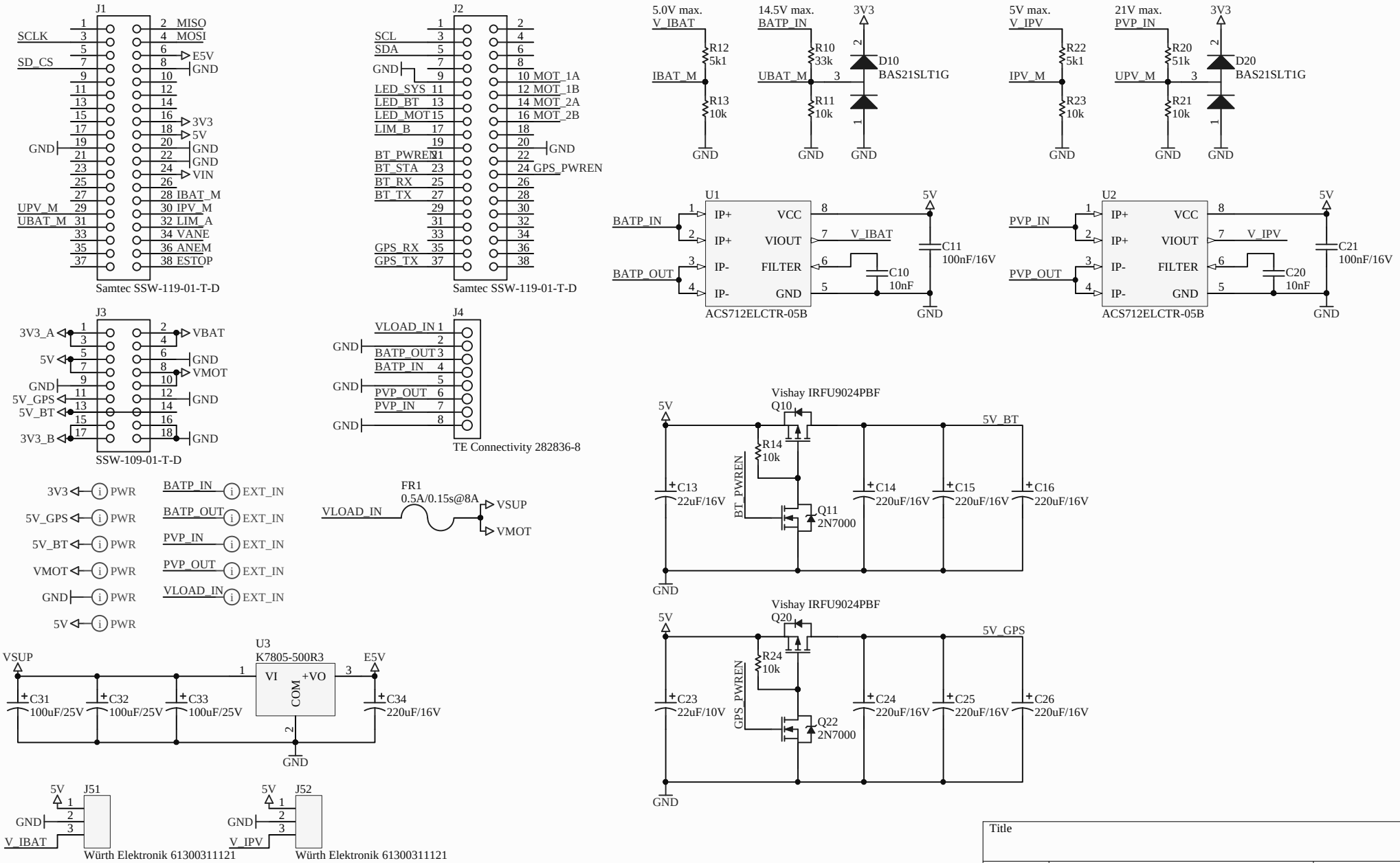

Title		
Size A4	Number	Revision
Date: 12.01.2020	Sheet of	
File: Power Board.SchDoc	Drawn By:	