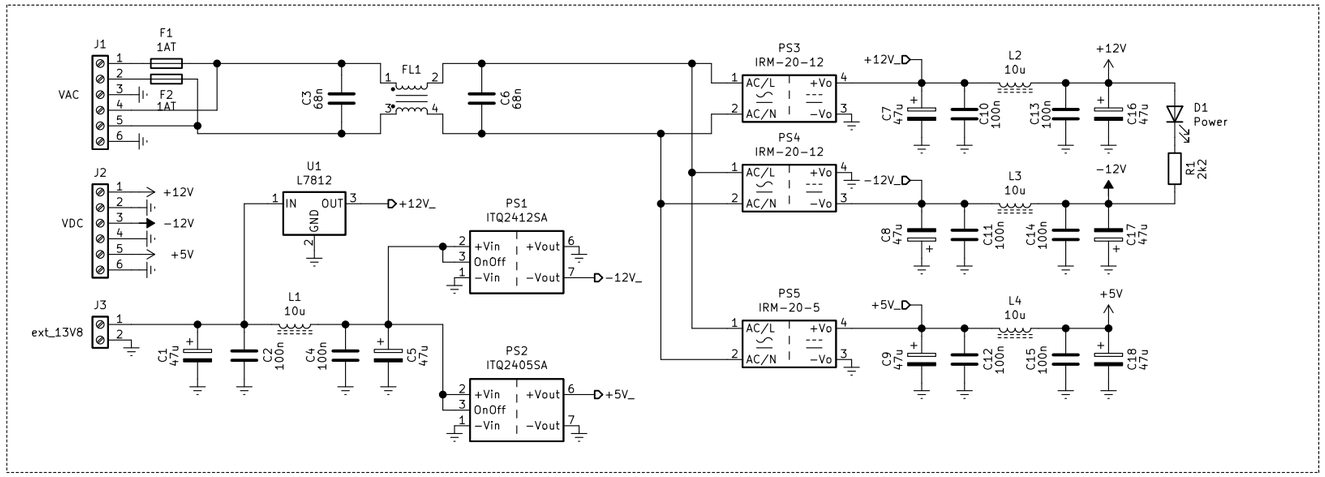

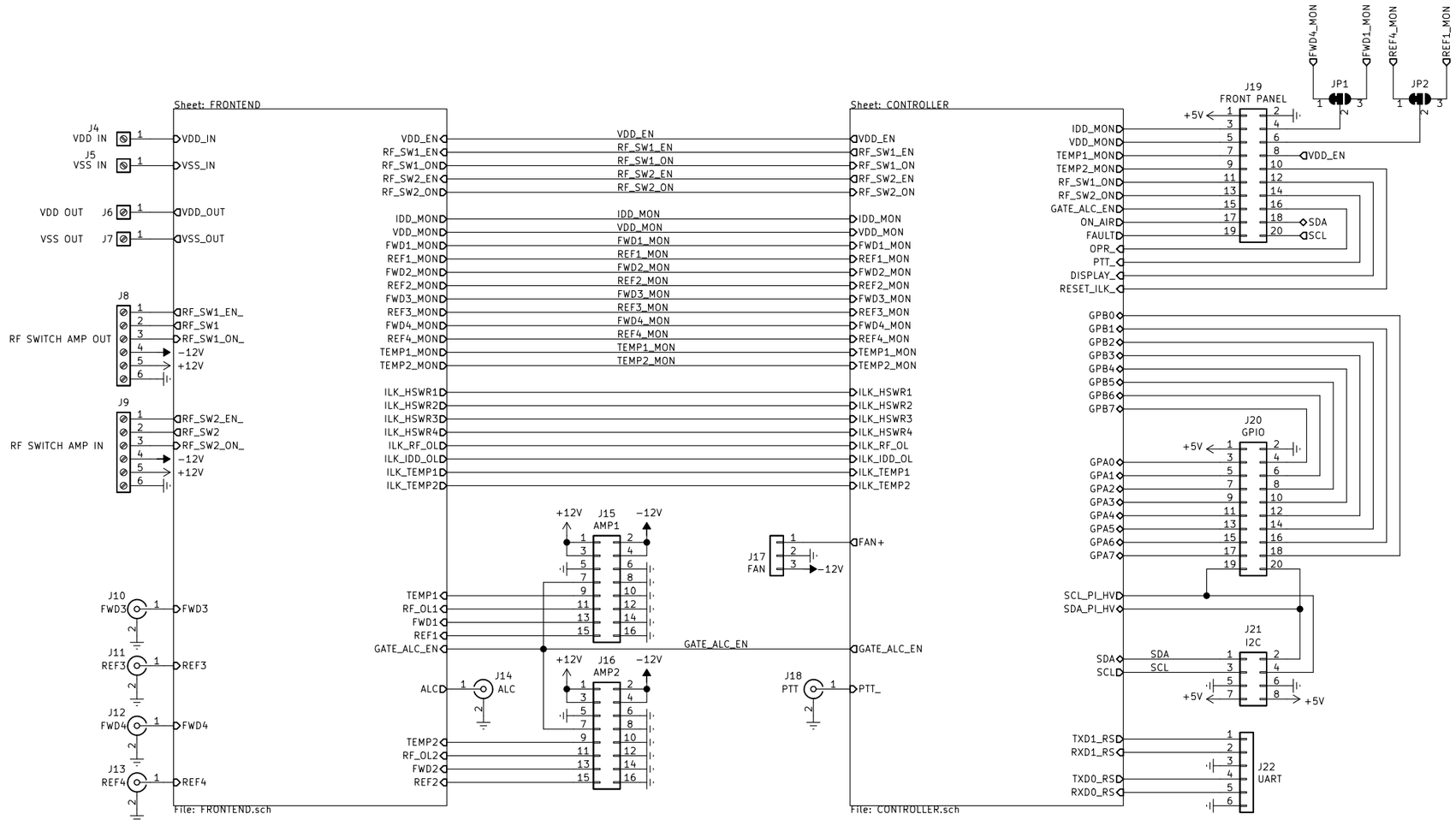

HB9GKW

Sheet: /
File: RF−AMP−CNTLR_V1.sch

Title: RF Amplifier Controller

Size: A3	Date: 2020−07−24	**Rev: 1**
KiCad E.D.A. kicad 5.1.6+dfsg1−1bpo10+1		Id: 1/3

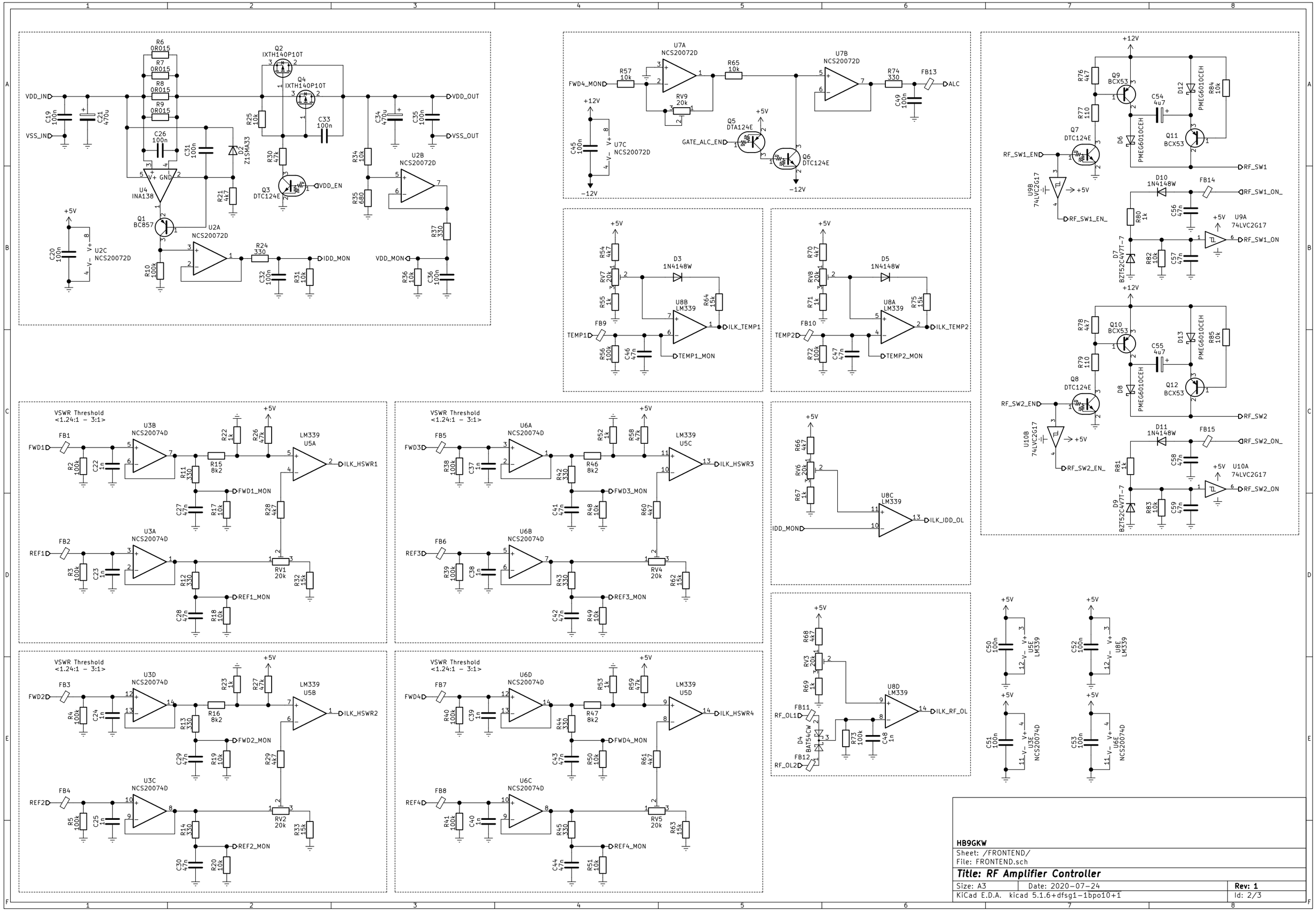

HB9GKW

Sheet: /FRONTEND/

File: FRONTEND.sch

Title: RF Amplifier Controller

Size: A3	Date: 2020-07-24	**Rev: 1**
KiCad E.D.A. kicad 5.1.6+dfsg1-1bpo10+1		Id: 2/3

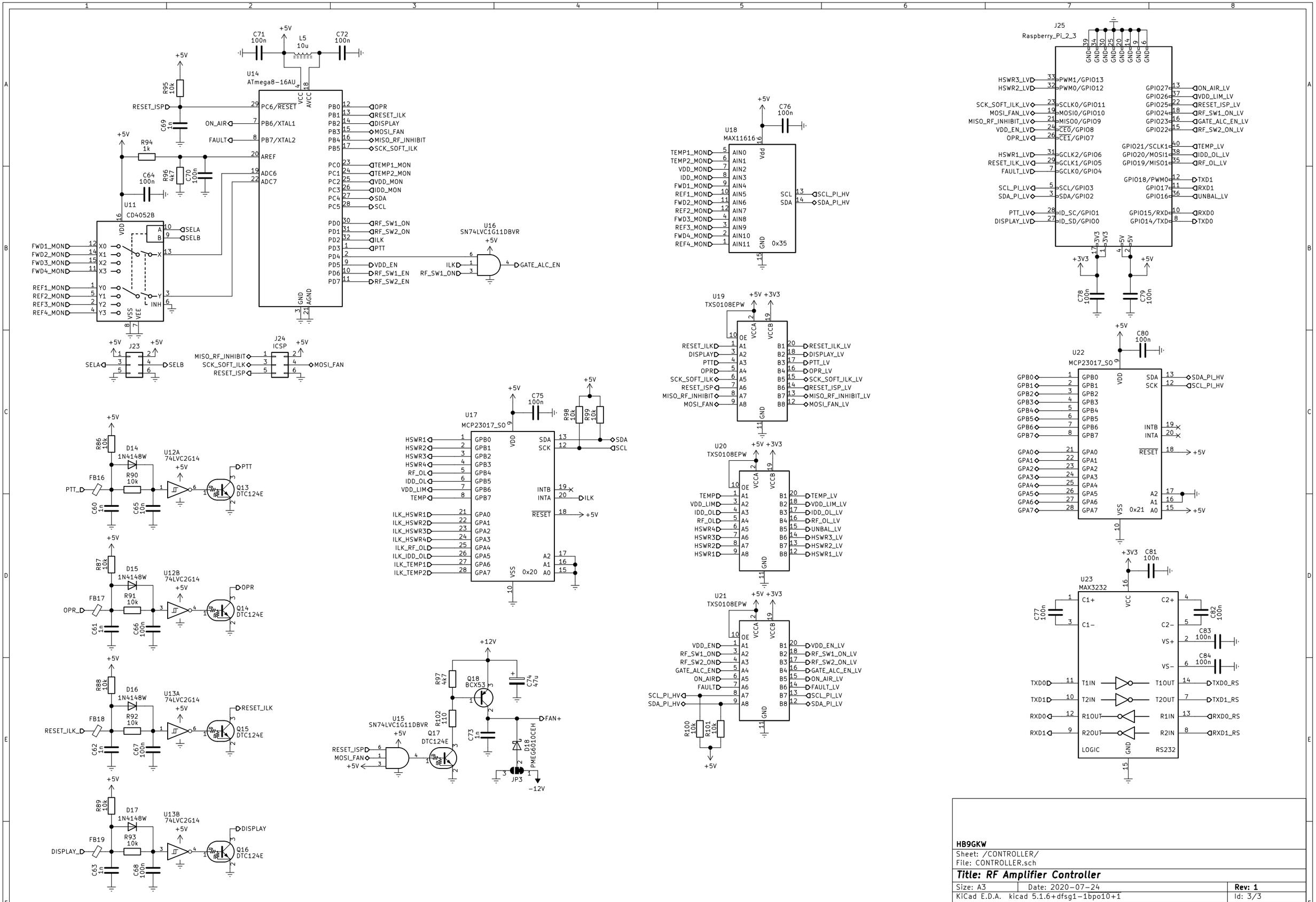
U14
ATmega8-16AU
U11
CD4052B
U16
SN74LVC1G11DBVR
J23
J24
ICSP
J25
Raspberry_Pi_2_3
U18
MAX11616
U19
TXS0108EPW
U20
TXS0108EPW
U21
TXS0108EPW
U22
MCP23017_SO
U17
MCP23017_SO
U23
MAX3232
U12A
74LVC2G14
U12B
74LVC2G14
U13A
74LVC2G14
U13B
74LVC2G14
U15
SN74LVC1G11DBVR
Q18
BCX53
Q17
DTC124E
D18
PMEG6010CEH
JP3
HB9GKW
Sheet: /CONTROLLER/
File: CONTROLLER.sch
Title: RF Amplifier Controller
Size: A3
Date: 2020-07-24
Rev: 1
KiCad E.D.A. kicad 5.1.6+dfsg1-1bpo10+1
Id: 3/3