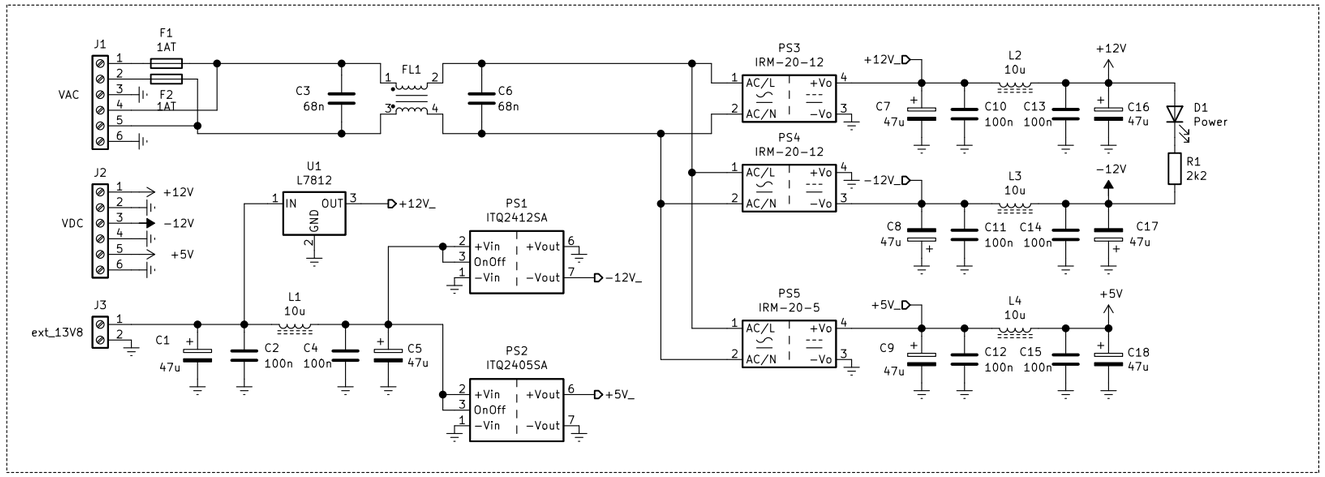

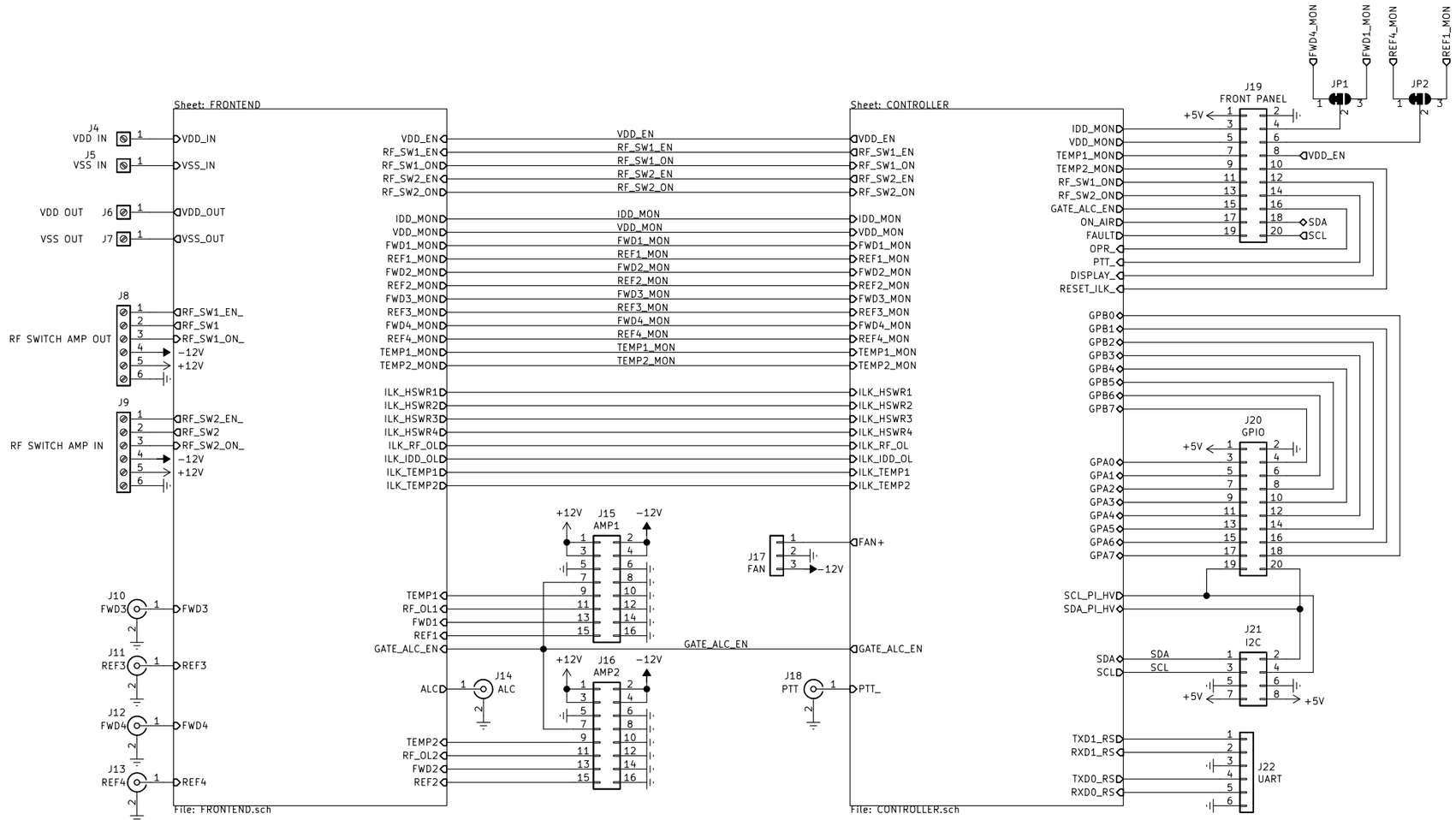

HB9GKW

Sheet: /

File: RF-AMP-CNTLR_V1.sch

Title: RF Amplifier Controller

Size: A3	Date: 2020-06-27	**Rev: 1**
KiCad E.D.A. kicad 5.1.6+dfsg1-1bpo10+1		Id: 1/3

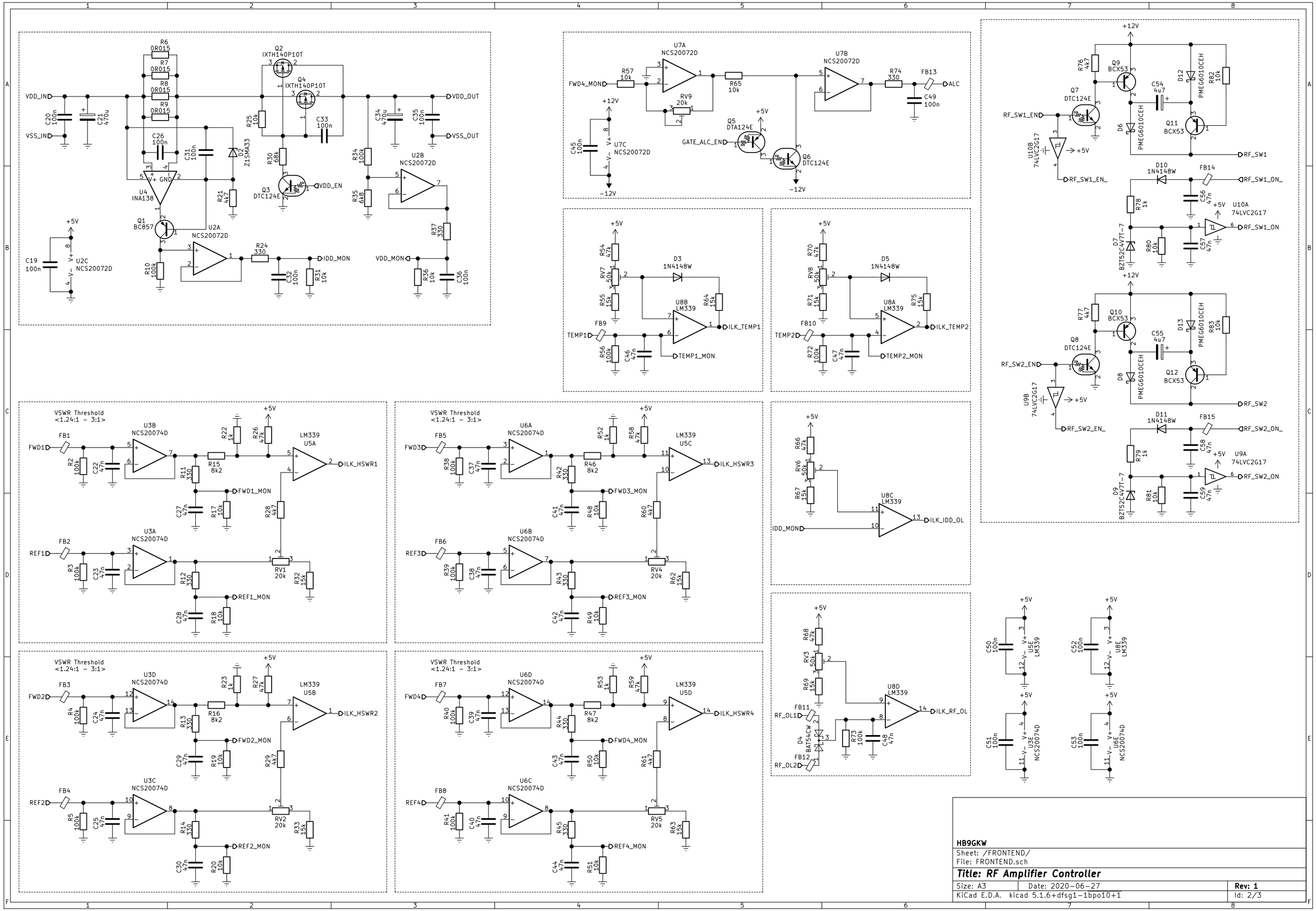

HB9GKW

Sheet: /FRONTEND/
File: FRONTEND.sch

Title: RF Amplifier Controller

Size: A3	Date: 2020-06-27	Rev: 1
KiCad E.D.A. kicad 5.1.6+dfsg1-1bpo10+1		Id: 2/3

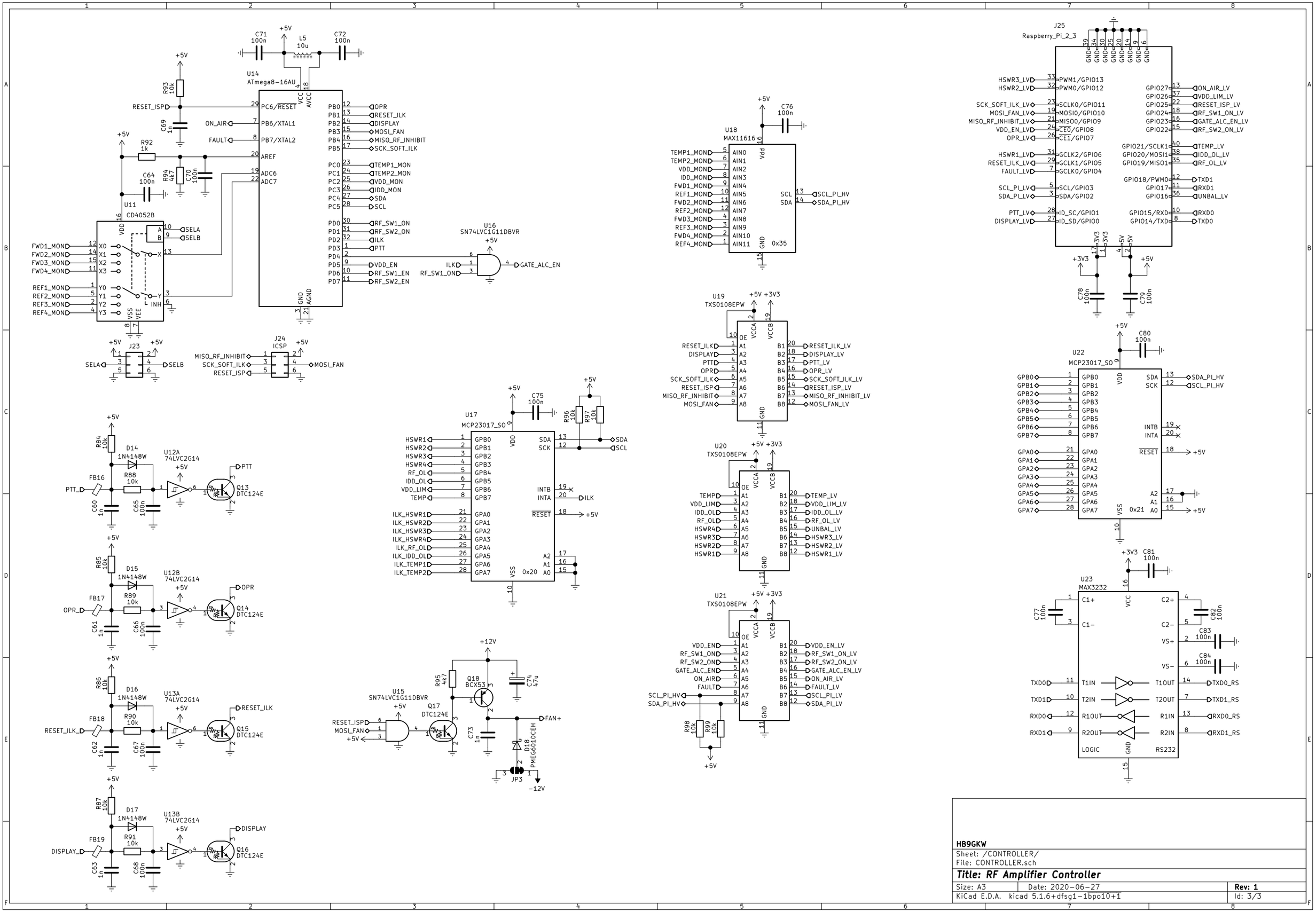

HB9GKW

Sheet: /CONTROLLER/
File: CONTROLLER.sch

Title: RF Amplifier Controller

Size: A3	Date: 2020-06-27	**Rev: 1**
KiCad E.D.A. kicad 5.1.6+dfsg1-1bpo10+1		Id: 3/3