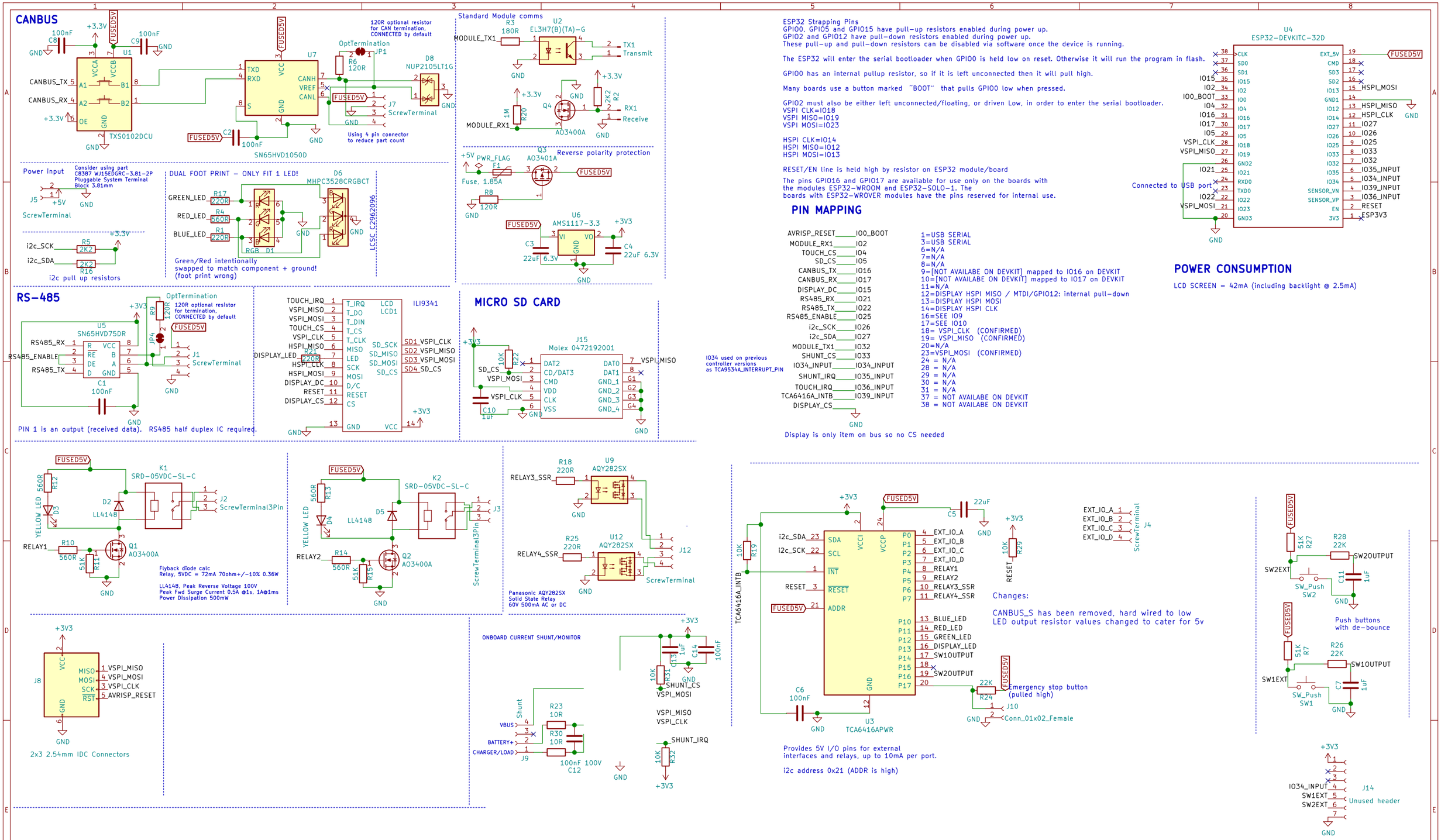

This work is licensed under a Creative Commons Attribution-NonCommercial-ShareAlike 2.0 UK: England & Wales License.

https://creativecommons.org/licenses/by-nc-sa/2.0/uk/

You are free to:
Share - copy and redistribute the material in any medium or format
Adapt - remix, transform, and build upon the material
The licensor cannot revoke these freedoms as long as you follow the license terms.

Non-Commercial - You may not use the material for commercial purposes.

Stuart Pittaway

Sheet: /
File: ControllerCircuit.sch

Title: DIYBMS ESP32 CONTROLLER

Size: A3	Date: 2023-01-03	Rev: 4.6
KiCad E.D.A. eeschema 5.1.9+dfsg1-1+deb11u1		Id: 1/1