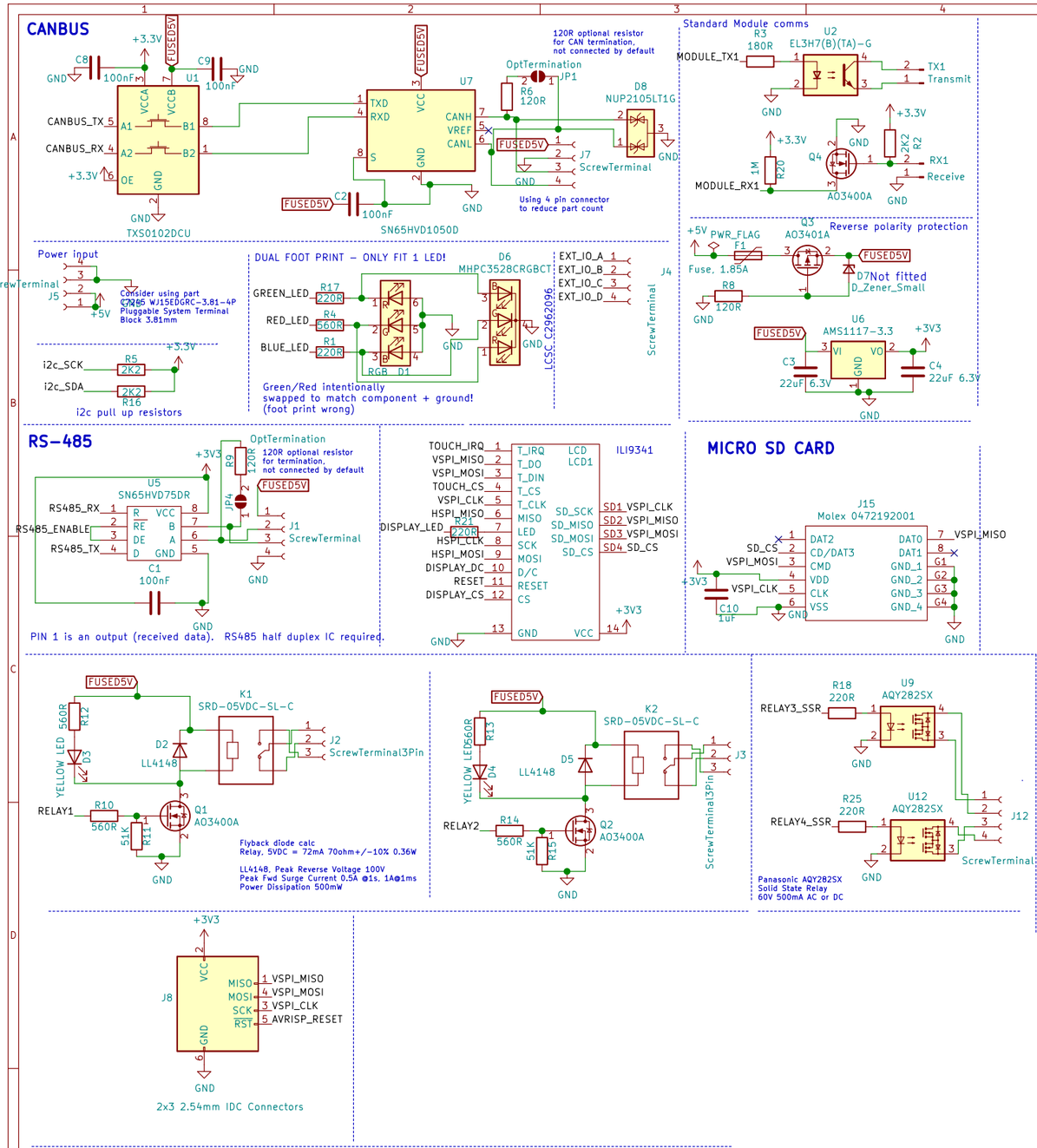

ESP32 Strapping Pins
GPIO0, GPIO5 and GPIO15 have pull-up resistors enabled during power up.
GPIO2 and GPIO12 have pull-down resistors enabled during power up.
These pull-up and pull-down resistors can be disabled via software once the device is running.

The ESP32 will enter the serial bootloader when GPIO0 is held low on reset. Otherwise it will run the program in flash.

GPIO0 has an internal pullup resistor, so if it is left unconnected then it will pull high.

Many boards use a button marked "BOOT" that pulls GPIO0 low when pressed.

GPIO2 must also be either left unconnected/floating, or driven Low, in order to enter the serial bootloader.
VSPI CLK=IO18
VSPI MISO=IO19
VSPI MOSI=IO23

HSPI CLK=IO14
HSPI MISO=IO12
HSPI MOSI=IO13

RESET/EN line is held high by resistor on ESP32 module/board

The pins GPIO16 and GPIO17 are available for use only on the boards with the modules ESP32-WROOM and ESP32-SOLO-1. The boards with ESP32-WROVER modules have the pins reserved for internal use.

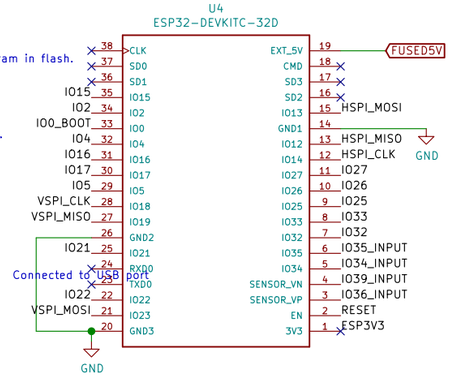

PIN MAPPING

AVRISP_RESET	IO0_BOOT	1=USB SERIAL
MODULE_RX1	IO2	3=USB SERIAL
TOUCH_CS	IO4	6=N/A
SD_CS	IO5	7=N/A
CANBUS_TX	IO16	8=N/A
CANBUS_RX	IO17	9=[NOT AVAILABE ON DEVKIT] mapped to IO16 on DEVKIT
DISPLAY_DC	IO15	10=[NOT AVAILABE ON DEVKIT] mapped to IO17 on DEVKIT
RS485_RX	IO21	11=N/A
RS485_TX	IO22	12=DISPLAY HSPI MISO / MTDI/GPIO12: internal pull-down
RS485_ENABLE	IO25	13=DISPLAY HSPI MOSI
i2c_SCK	IO26	14=DISPLAY HSPI CLK
i2c_SDA	IO27	16=SEE IO9
MODULE_TX1	IO32	17=SEE IO10
IO33	IO33	18= VSPI_CLK (CONFIRMED)
IO34_INPUT	IO34_INPUT	19= VSPI_MISO (CONFIRMED)
IO35_INPUT	IO35_INPUT	20=N/A
TOUCH_IRQ	IO36_INPUT	23=VSPI_MOSI (CONFIRMED)
TCA6416A_INTB	IO39_INPUT	24 = N/A
DISPLAY_CS		28 = N/A
		29 = N/A
		30 = N/A
		31 = N/A
		37 = NOT AVAILABE ON DEVKIT
		38 = NOT AVAILABE ON DEVKIT

Display is only item on bus so no CS needed

POWER CONSUMPTION

LCD SCREEN = 42mA (including backlight @ 2.5mA)

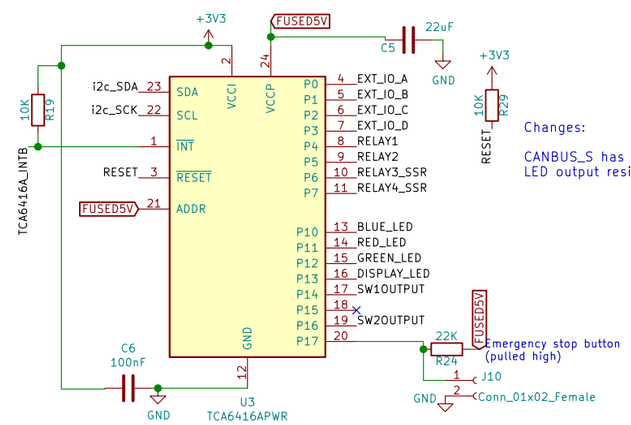

Provides 5V I/O pins for external interfaces and relays, up to 10mA per port.

i2c address 0x21 (ADDR is high)

Changes:

CANBUS_S has been removed, hard wired to low
LED output resistor values changed to cater for 5v

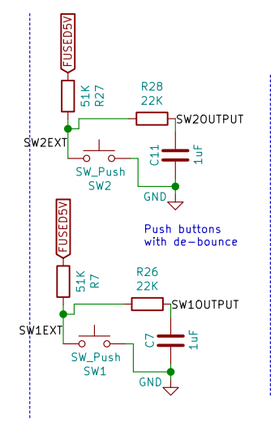

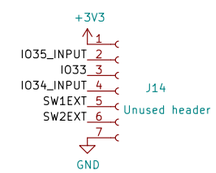

This work is licensed under a Creative Commons Attribution-NonCommercial-ShareAlike 2.0 UK: England & Wales License.

https://creativecommons.org/licenses/by-nc-sa/2.0/uk/

You are free to:
Share - copy and redistribute the material in any medium or format
Adapt - remix, transform, and build upon the material
The licensor cannot revoke these freedoms as long as you follow the license terms.

Non-Commercial - You may not use the material for commercial purposes.

Stuart Pittaway

Sheet: /
File: ControllerCircuit.sch

Title: DIYBMS ESP32 CONTROLLER

Size: A3	Date: 2022-02-21	Rev: 1.2
KiCad E.D.A. eeschema 5.1.9+dfsg1-1+deb11u1		Id: 1/1