PCB Layout Guidelines for the MAX14921

Data Sheet MAX14921

Eval Board

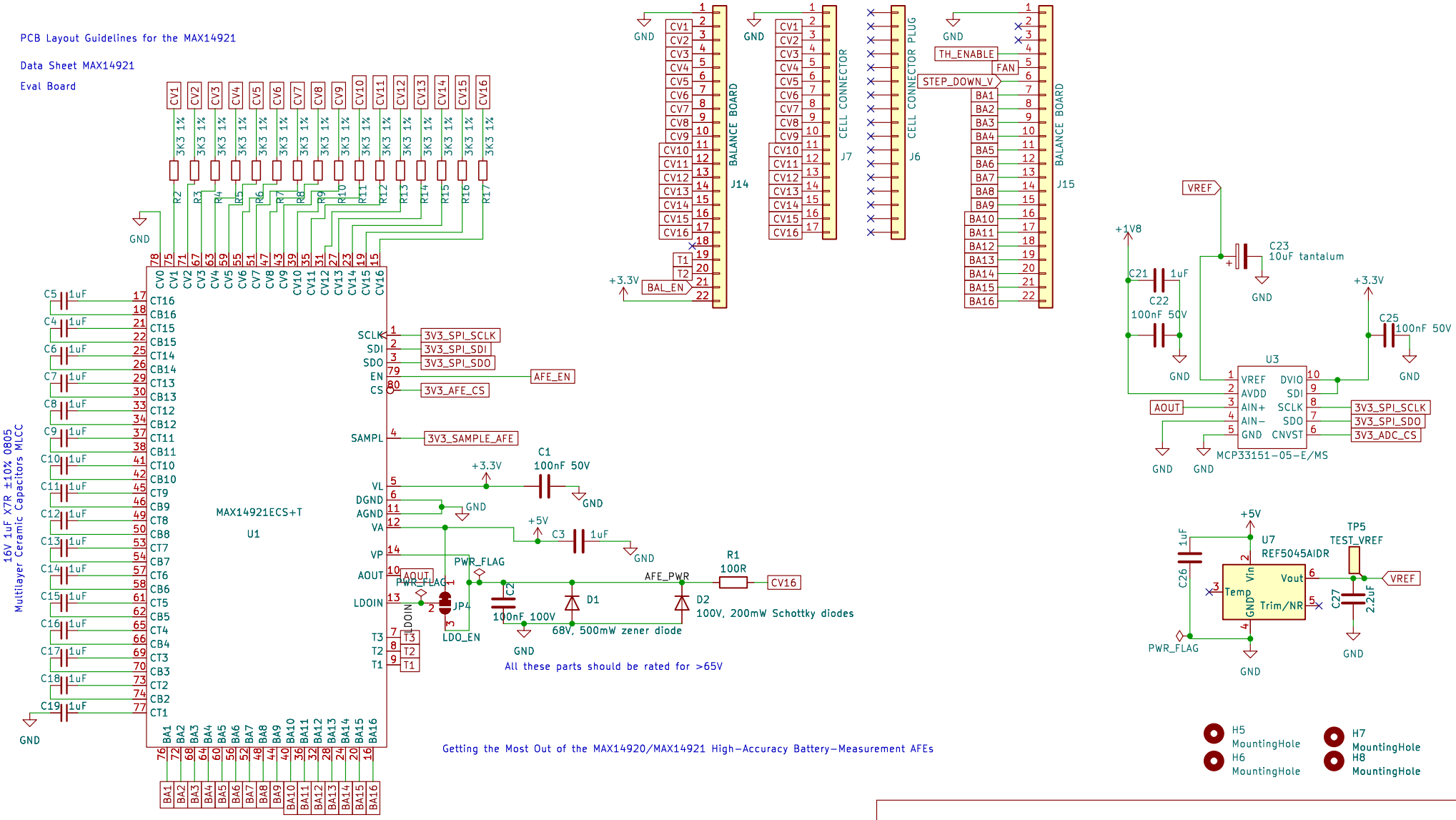

Sheet: /
File: Module_16S.kicad_sch

Title:

Size: A4	Date:	Rev:
KiCad E.D.A. kicad-cli 7.0.9-7.0.9~ubuntu23.04.1		Id: 1/3

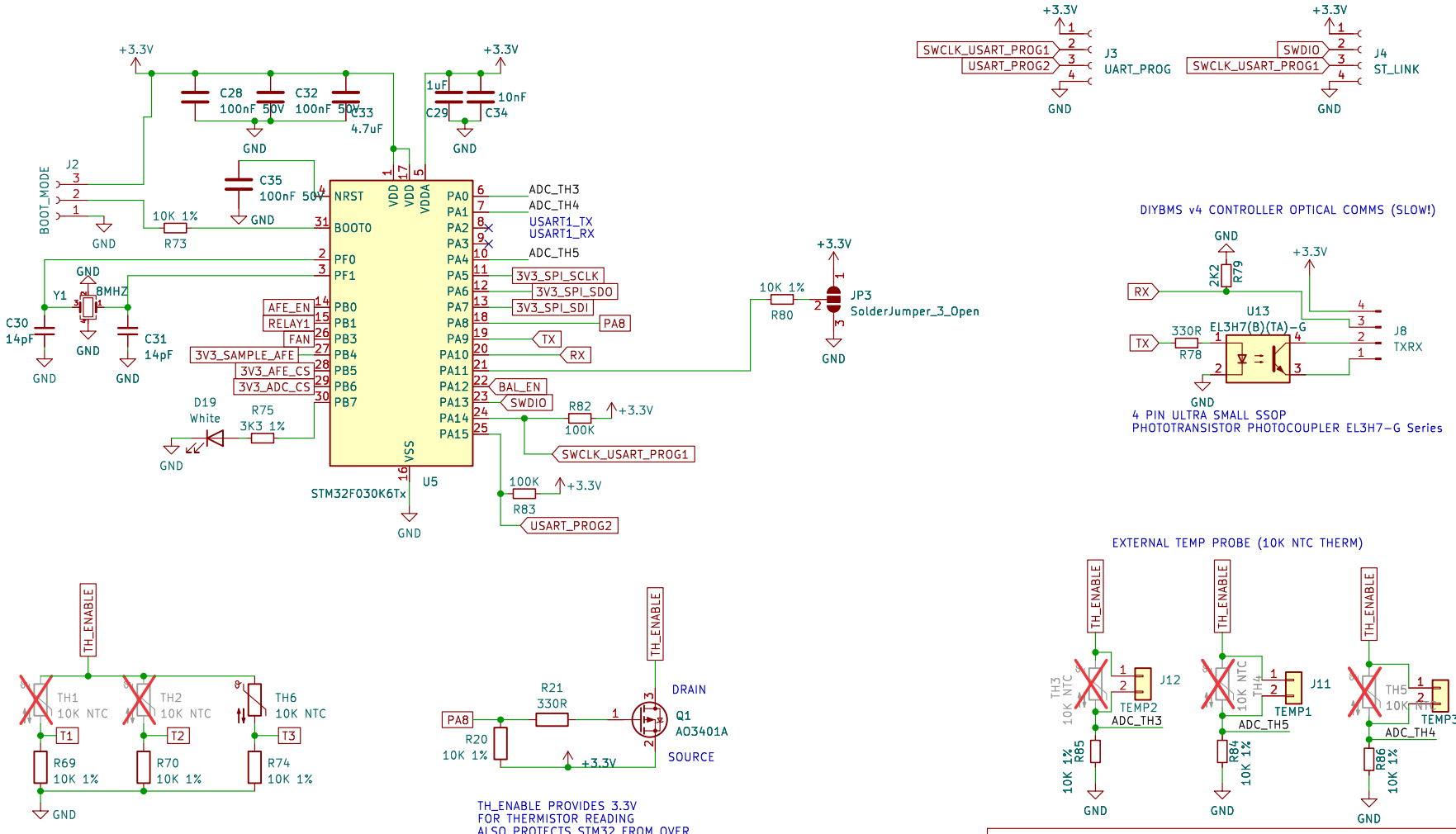

Sheet: /STM32/
File: STM32.kicad_sch

Title:

Size: A4	Date:	Rev:
KiCad E.D.A. kicad-cli 7.0.9-7.0.9~ubuntu23.04.1		Id: 3/3

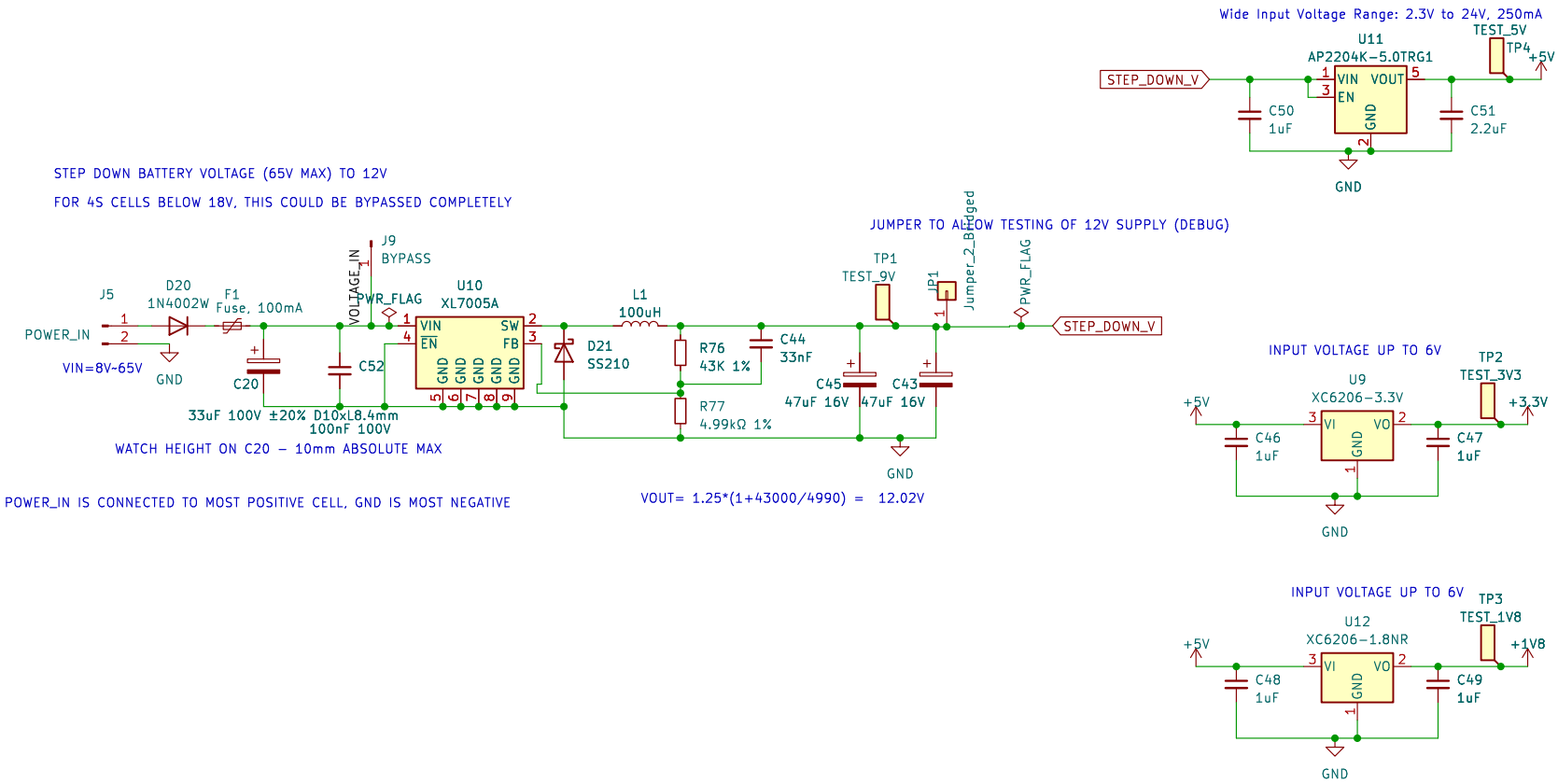

Sheet: /PowerSupply/
File: PowerSupply.kicad_sch

Title:

Size: A4	Date:	Rev:
KiCad E.D.A. kicad-cli 7.0.9-7.0.9~ubuntu23.04.1		Id: 4/3