E32R40T&E32N40T

4.0inch ESP32-32E Display Module Specification

ShenZhen QDtech electronic technology Co.,LTD.

REV	Record	Date
V1.0	First Release	Apr-17-2025

CONTENTS

1. GENERAL DESCRIPTION 3
1.1.Product Introduction 3
1.2.Image 3
1.3.Accessory List 4
2. PRODUCT FEATURES 4
2.1.Feature Description 4
3. PRODUCT PARAMETERS 5
3.1.ESP32 main control parameters 5
3.2.TFT Parameters 6
3.3.Touch screen parameters 6
3.4.Size Parameters 7
3.5.Battery charging parameters 7
3.6.Electrical parameters 7
3.7.Other Parameters 7
4. PRODUCT INTERFACE 8
4.1.Interface Function Description 8
4.2.ESP32 pin allocation 9
5. PRODUCT OUTLINE DRAWING 12
5.1.E32R40T Outline Drawing 12
5.2.E32N40T Outline Drawing 13
6. PRECAUTIONS 14
6.1.Safe Use of Products 14
6.2.Frequently Asked Questions FAQ 14

1. GENERAL DESCRIPTION

1.1. Product Introduction

The E32R40T and E32N40T are two 4.0-inch display modules with ESP32-32E module main control. The E32R40T has a resistive touch screen and the E32N35T does not have a touch screen. Both products use the ST7796 screen driver IC with a resolution of 320x480, which can be connected to a variety of peripherals, such as I2C and SPI interface devices, audio speakers, lithium batteries, MicroSD cards, serial ports, etc. E32R35T also has touch function, which is greatly convenient for users to do various DIY. At the same time to meet the user for the Internet of things and human-computer interaction function development.

1.2. Image

Front

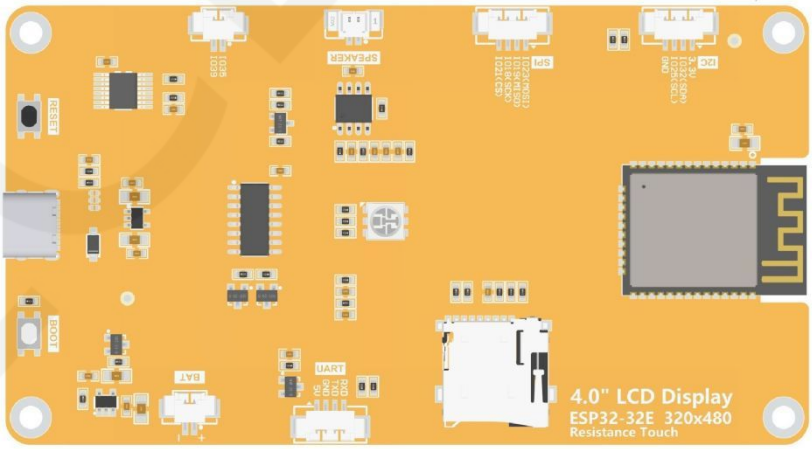

Back

Figure 1.1 E32R40T product diagram

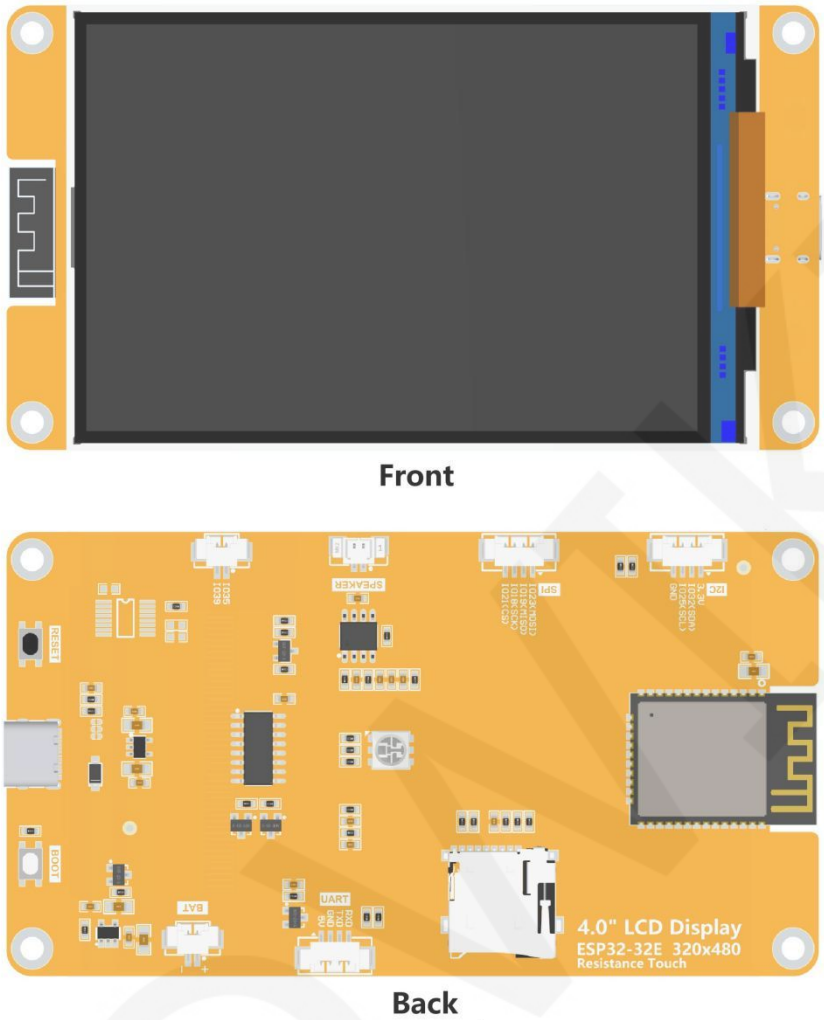

Figure 1.2 E32N40T product diagram

1.3. Accessory List

A resistance stylus(E32R40T configuration) and a Type-C data power cable are configured. The length of the resistance stylus is 87mm and the diameter is 5mm. The length of the Type-C data power cable is 1m.

Figure 1.3 Resistive stylus

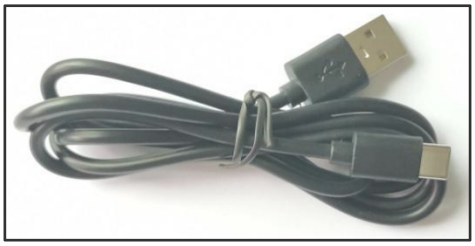

Figure 1.4 Type-C data power cable

2. PRODUCT FEATURES

2.1. Feature Description

- Comes with ESP32-32E module, easy development, sufficient development resources
- 4.0-inch color screen, 320x480 resolution, maximum support 262K color (RGB666), display rich colors
- Rich interface, easy to connect a variety of peripherals (I2C, SPI, UART,etc.)
- Supports external speakers to play audio
- Comes with RGB three-color indicator, indicating rich status
- Comes with resistive touch screen, easy man-machine interaction
- Standard TYPE-C interface for easy program download and power supply
- Equipped with micro TF card slot for easy storage expansion
- Support external lithium battery, lightweight and portable
- Equipped with battery charging management circuit to ensure safe battery charging and discharging
- Provide rich example learning programs, easy to learn
- Provide low-level driver technical support, and update WIKI information online
- Multiple tests for module aging can meet military level standards, supporting long-term stable work

3. PRODUCT PARAMETERS

3.1. ESP32 main control parameters

Item	Parameters	Unit
Module	ESP32-32E	-
CPU	ESP32-D0WD-V3,Xtensa dual-core 32-bit LX6 microprocessor	-
Frequency	240MHz (Max)	-
Memory	48KB ROM+520KB SRAM+16KB RTC SRAM+4MB external QSPI	-

	Flash	
WIFI	2.4GHz and 802.11b/g/n modes	-
Bluetooth	Bluetooth V4.2BR /EDR and Bluetooth LE standards	-
Operating Voltage	3.0~3.6	V
Operating Temperature	-40~85	℃

3.2. TFT Parameters

Item	Parameters	Unit
Panel Size	4.0	inch
Panel Type	TN TFT	-
Resolution	320xRGBx480	pixels
Active Area	55.68(W)x83.52(H)	mm
Number of Colors	Max: 262K(RGB666) Common: 65K(RGB565)	-
Driver IC	ST7796U	-
Display Interface	4-Line SPI(Connect to ESP32)	-
Pixel Size	0.174(H)x0.174	mm
View Angle	12 0'CLOCK	deg
Brightness(TYP)	450	cd/m^2
Backlight Type	White LED*8	-
Operation Temperature	-10~60	℃
Storage Temperature	-20~70	℃

3.3. Touch Screen Parameters

Item	Parameters	Unit
Touch Active Area	4.0	inch
Touch Screen Type	Resistive touch screen	-
Driver IC	XPT2046	-
Effective Touch Area	56.28(W)x84.32(H)	mm
TVisual Area	56.88(W)x85.22(H)	mm
Communication Interface	SPI	-
Material	ITO film +ITO glass	-
Operation Temperature	-10~60	℃
Storage Temperature	-20~70	℃

3.4. Size Parameters

Item	Parameters	Unit
TFT Outline Size	60.88±0.2(W)x94.57±0.2(H)x2.5±0.1(D)(Excluding cables and adhesive backing)	mm
Touch Screen Outline Size	60.48±0.2(W)x93.87±0.2(H)x1.05±0.1(D)(Excluding cables and adhesive backing)	mm
Module Outline Size	Have touch screen:60.88(W)x111.11(H)x5.65(D) Have no touch screen: 60.88(W)x111.11(H)x4.60(D)	mm

3.5. Battery charging parameters

Item	Parameters	Unit
Charging Voltage	Range: 4.2 to 6.5 Typical value: 5	V
Charging Current	Max. : 500 Module Actual value: 290	mA
Charging Saturation Voltage	4.24	W
Charging Temperature	Module maximum value: 62	℃
Battery Specifications	3.7V polymer lithium battery	-

3.6. Electrical Parameters

Item	Parameters	Unit
Working Voltage	5.0	V
Backlight Current	142	mA
Brightness (Actual Value)	Have touch screen:370 Have no touch screen:472	cd/m^2
Total Current	ESP32 reset: 40 Only the display works: 230 Display, speaker, battery charging all work: 580	mA
Power	1.15 (Display only works)	W
Speaker Power (Max)	1.5(8Ω) or 2(4Ω)	W

3.7. Other Parameters

Item	Parameters	Unit
SKU	Have touch screen:E32R40T Have no touch screen:E32N40T	-
Power Supply Interface	TYPE-C	-
Weight(including package)	E32R35T: 130 E32N35T: 119	g

4. PRODUCT INTERFACE

4.1. Interface Function Description

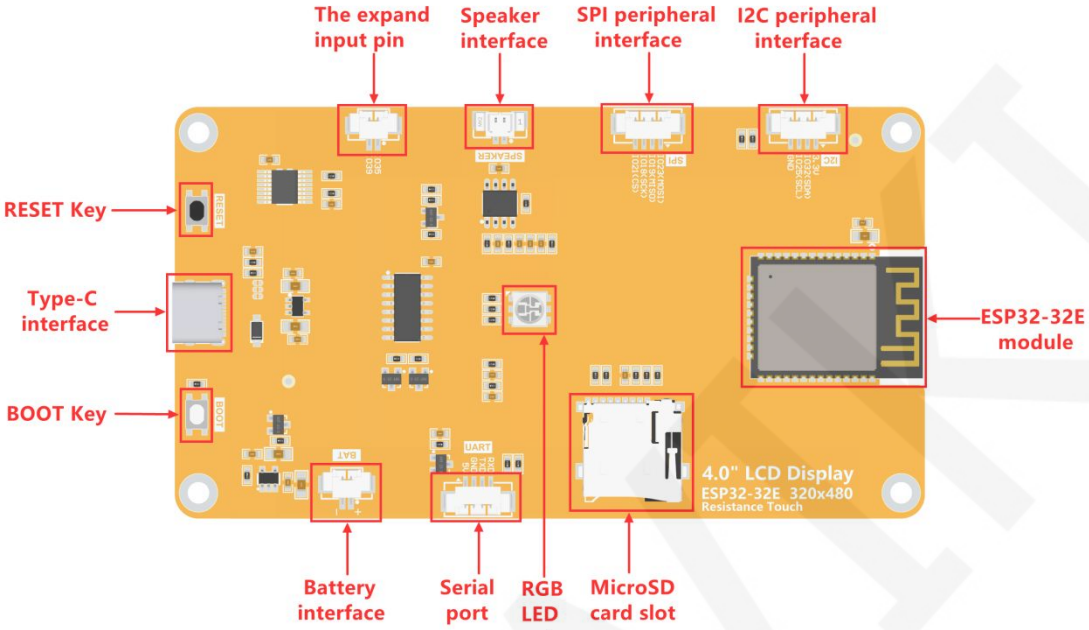

Figure 4.1 product interface diagram

Interface Name	Function Description
ESP32-32E Module	Display module main control, control board peripheral and external peripheral.
MicroSD card slot	A MicroSD card is inserted to expand the storage space for storing large data such as characters, pictures, and audio files.
RGB LED	Contains red, green, blue three colors of LED lights, each light can be controlled by IO, used to indicate the status.
Serial port	1.25mm 4P connector.It can be used for serial debugging, downloading, and communication. An external USB to serial port module is required.
Battery interface	1.25mm 2P connector.Used to connect 3.7V polymer lithium battery, charge the battery through the battery charge management circuit, can also be used for battery power supply. Note the positive and negative terminals of the interface.

BOOT Key	Used to enter download mode or key test. Press and hold this button to power on and release it to enter the download mode. Alternatively, press and hold this button and then press the RESET button to release the RESET button and then release this button to enter the download mode. When you do not need to enter the download mode, this button can be used as a common button.
Type-C Interface	Used for module power supply and download programs. This interface is connected to the one-click download circuit on the module, which can automatically enter the download mode (without pressing the BOOT key).
RESET Key	Used for ESP32 master control and LCD reset, level reset after pressing.
Expand the input pin	1.25mm 2P connector. IO35 and IO39 are two input-only IOs that are used to access input signals.
Speaker interface	1.25mm 2P connector. Used to access the speaker to play audio, this interface is connected to the audio power amplifier circuit (Supports 1.5W (8 Ω) or 2W (4 Ω) speakers).
SPI peripheral interface	1.25mm 4P connector. Used to connect devices that use SPI communication. This SPI interface is shared with MicroSD. It can be used as ordinary IO.
I2C peripheral interface	1.25mm 4P connector. For external connection to devices that use IIC communication. It can be used as ordinary IO.

4.2. ESP32 pin allocation

Onboard Device	ESP32 Connect pins	Pin description of onboard equipment
LCD	IO15	LCD screen selection control signal, low level effective
	IO2	LCD command/data selection control signal High Level:data,low Level:command
	IO14	SPI bus clock signal(shared by LCD and touch screen)
	IO13	SPI bus write data signal(shared by LCD and touch screen)
	IO12	SPI bus read data signal(shared by LCD and touch screen)
	EN	LCD reset control signal, low level reset(share reset pin with ESP32-32E master)

	IO27	LCD backlight control signal(high level backlight on, low level backlight off)
Resistive touch screen	IO14	SPI bus clock signal(shared by touch screen and LCD)
	IO13	SPI bus write data signal(touch screen and LCD screen shared)
	IO12	SPI bus read data signal(shared by touch screen and LCD screen)
	IO33	Resistive touch screen chip selection control signal,low level effective
	IO36	Resistive touch screen touch interrupt signal,generates touch when input low level to master
RGB three-color light	IO22	Red LED light(common anode, low level on, high level off)
	IO16	Green LED light(common anode, low level on, high level off)
	IO17	Blue LED light(common anode, low level on, high level off)
MicroSD Card	IO5	SD card select signal,low level effective
	IO23	SD card SPI bus write data signal(shared by MicroSD card and SPI peripheral)
	IO18	SD card SPI bus clock signal(shared by MicroSD card and SPI peripheral)
	IO19	SD card SPI bus read data signal(shared by MicroSD card and SPI peripheral)
Audio	IO4	Audio enable signal,low level enable,high level disable
	IO26	Audio signal DAC output signal
KEY	IO0	Download mode Select button(Press and hold the button to power on, then release to enter download mode)
	EN	ESP32-23E reset button, low level reset(shared with LCD reset)
Serial Port	RXD0(IO3)	ESP32-32E serial port receiving signal(if the serial port is not used, it can be used as ordinary IO)
	TXD0(IO1)	ESP32-32E serial port sends signals(if the serial port is not used, it can be used as ordinary IO)
Battery	IO34	Battery voltage ADC value Get Signal (input)

SPI peripheral	IO21	SPI peripheral chip selection signal, low level effective(if the SPI device is not used, it can be used for ordinary IO)
	IO18	SPI bus clock pin for SPI peripherals (SPI peripherals are shared with MicroSD cards, if SPI devices or SD cards are not used, ordinary IO can be used)
	IO19	The SPI bus read data pin of the SPI peripheral (SPI peripherals are shared with MicroSD cards, if SPI devices or SD cards are not used, ordinary IO can be used)
	IO23	The SPI bus of the SPI peripheral writes data pins (SPI peripherals are shared with MicroSD cards, if SPI devices or SD cards are not used, ordinary IO can be used)
I2C peripheral	IO25	I2C bus clock pin for I2C peripherals (can be used as normal IO if I2C device is not used)
	IO32	I2C bus data pins for I2C peripherals (can be used for ordinary IO if I2C devices are not used)
NC	IO35	It can only be used as input IO
	IO39	

5. PRODUCT OUTLINE DRAWING

5.1. E32R40T Outline Drawing

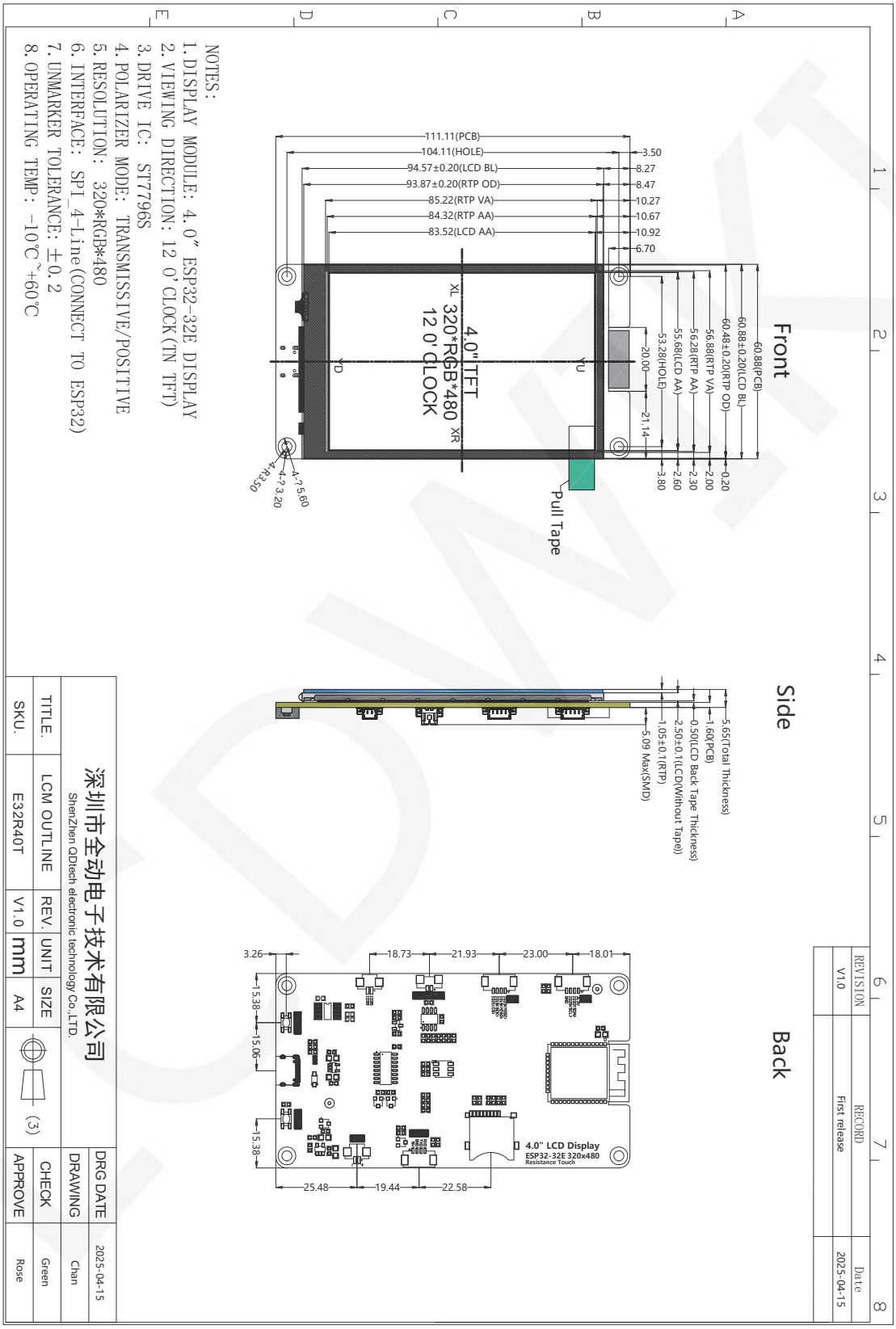

Figure 5.1 Dimensions of E32R40T

5.2. E32N40T Outline Drawing

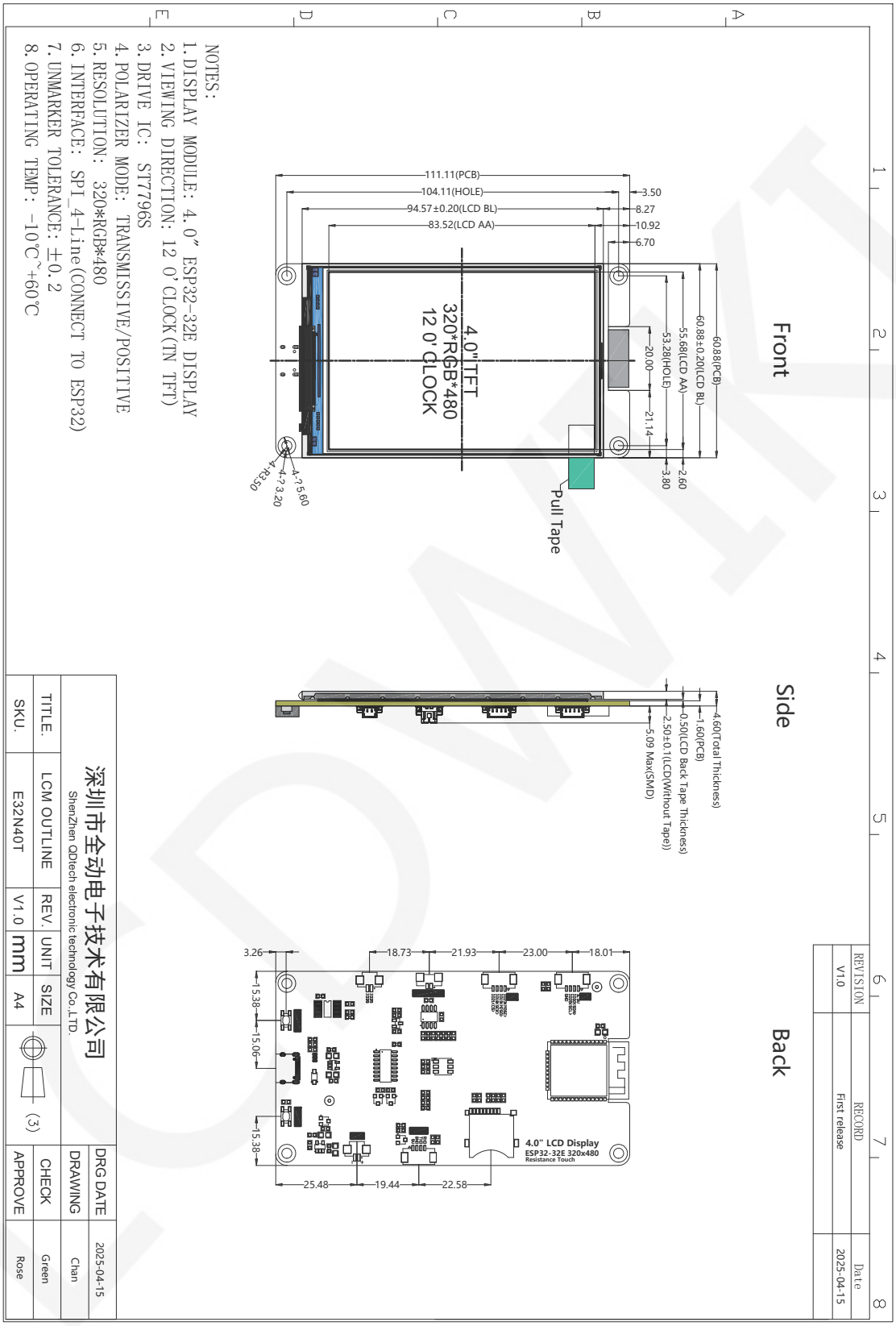

Figure 5.2 Dimensions of E32N40T

6. PRECAUTIONS

1.1. Safe Use of Products

- Do not use violence to press or hit the screen to avoid damaging it
- Do not use hard objects to scratch the screen to avoid scratching it
- Do not place heavy items on the product to avoid crushing the screen
- Please keep the product clean and do not drip water or oil on the screen
- Please use a clean, soft, and dry cloth to wipe the screen, and do not spray water or cleaning agents directly onto the screen
- Do not disassemble the product randomly to avoid damaging the screen or wiring
- Do not place the product in a high temperature and humidity environment
- Please place the product facing upwards in a stable place to prevent it from falling and damaging the product
- Please use the correct voltage to connect to the product to avoid damage due to high voltage
- When using the product, do not touch the components or pins with wet hands to avoid causing short circuits and damaging the product
- When the product is not in use for a long time, please unplug the power supply
- When charging the battery, pay attention to ventilation and heat dissipation to avoid damage to the product due to excessive temperature
- When charging the battery, do not touch the charging management IC with your hands to avoid being burned by high temperature

1.2. Frequently Asked Questions FAQ

- **Question 1: After receiving the product, there is no reaction on the power, and the screen is not bright**

  Analysis:

  This product requires the backlight control pin to be pulled high to light the backlight, so make sure the ESP32 master has burned a program with the function of lighting the backlight. If the relevant program has been burned, there

is still a backlight is not bright, it is necessary to check the voltage of the power supply interface and the contact of the power supply line. If battery power is used, check whether the battery is sufficient.

If the backlight still does not respond according to the above operation, it is presumed that the hardware circuit is faulty.

- **Question 2: After receiving the product, power on to test the back light, but there is no display screen**

Analysis:

The back light indicates that the module has been powered on normally, but if the screen needs to be normal, the SPI communication and control signals need to be completely normal. Need to check whether the burned program is correctly matched, including screen driver IC selection, GPIO definition, and so on.

It is recommended that the first use of our test sample program first, the program does not make any changes directly compiled and downloaded, so as to exclude the point caused by the modification of the program. At the same time, pay attention to whether the sample program is successfully compiled and downloaded, and whether the display module is running normally.

If you can't display the picture normally after several times according to the above steps, you should use the necessary tools such as multimeter/oscilloscope/logic analyzer to analyze and detect the signal, and contact our technical staff for help.

- **Question 3: The product can display normally, but there is no response to touch**

Analysis:

There may be several reasons for this:

- burned test program without touch function;
- The GPIO related to touch screen control is not defined or is incorrectly defined in the test software;

- burned test program with touch function, but the resistance touch screen is not calibrated, or calibrated but the calibration parameters are not written to the program, or the calibration parameters written to the program are incorrect.
- The resistive touch screen and display screen of this product share SPI bus communication, the software is not properly handled, there will be communication conflict, and touch will not respond.
- Hardware is damaged, including the touch control IC is damaged, and the touch screen cable is damaged or broken.

➢ **Question 4: The product can display, but the backlight brightness fluctuates and is unstable**

Analysis:

The backlight circuit of this product is driven by field effect tube. The backlight control pin input lights up the backlight at high level and extinguished the backlight at low level. PWM signal can also be dimmed through the input of the backlight control pin. If the backlight control pin voltage changes, the backlight brightness will also change, which may lead to backlight instability. In addition, the instability of the supply voltage can also lead to this phenomenon.

➢ **Question 5: The external battery cannot be charged**

Analysis:

The battery charge management circuit of this product is only suitable for charging 3.7V polymerized lithium batteries. The external battery cannot be charged for the following reasons:

- The type of external battery is incorrect.
- The positive and negative terminals of the battery are inversely connected.
- The battery has reached saturation and will stop charging when connected.
- The charge management IC is damaged.