Indian Institute of Technology, Bombay
Department of Electrical Engineering

EE 344
Electronic Devices Lab
Milestone 3
Initial subsystem testing review

DSO

Submitted by -

Abhinav Ghunawat
Harsh Lulla
Harsh Choudhary

Guided by -

Prof. Joseph John
Prof. PC Pandey

Contents

1 Design **3**
- 1.1 Circuit Schematic . . . 3
- 1.2 PCB Layout . . . 5
- 1.3 CAD Design . . . 6
- 1.4 GUI . . . 7
- 1.5 Bill Of Material . . . 8
- 1.6 Block Diagram . . . 8

2 Abstract and Motivation **8**

3 Results and Observations **8**

4 Test Results **9**
- 4.1 Voltage Scaling and shifting . . . 9
- 4.2 I to V converter . . . 10
- 4.3 Statement of Contribution . . . 10

5 Conclusions and Future Work **11**

6 Important Links **11**

7 References **11**

1 Design

1.1 Circuit Schematic

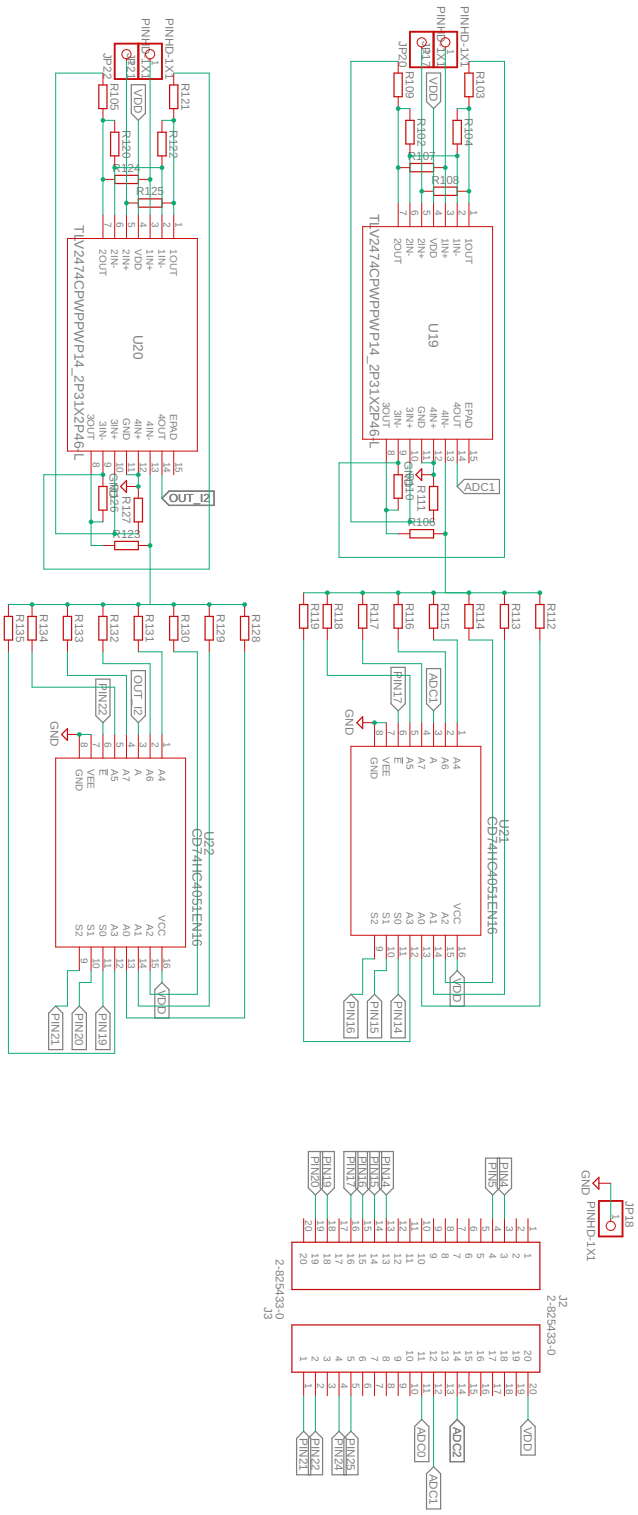

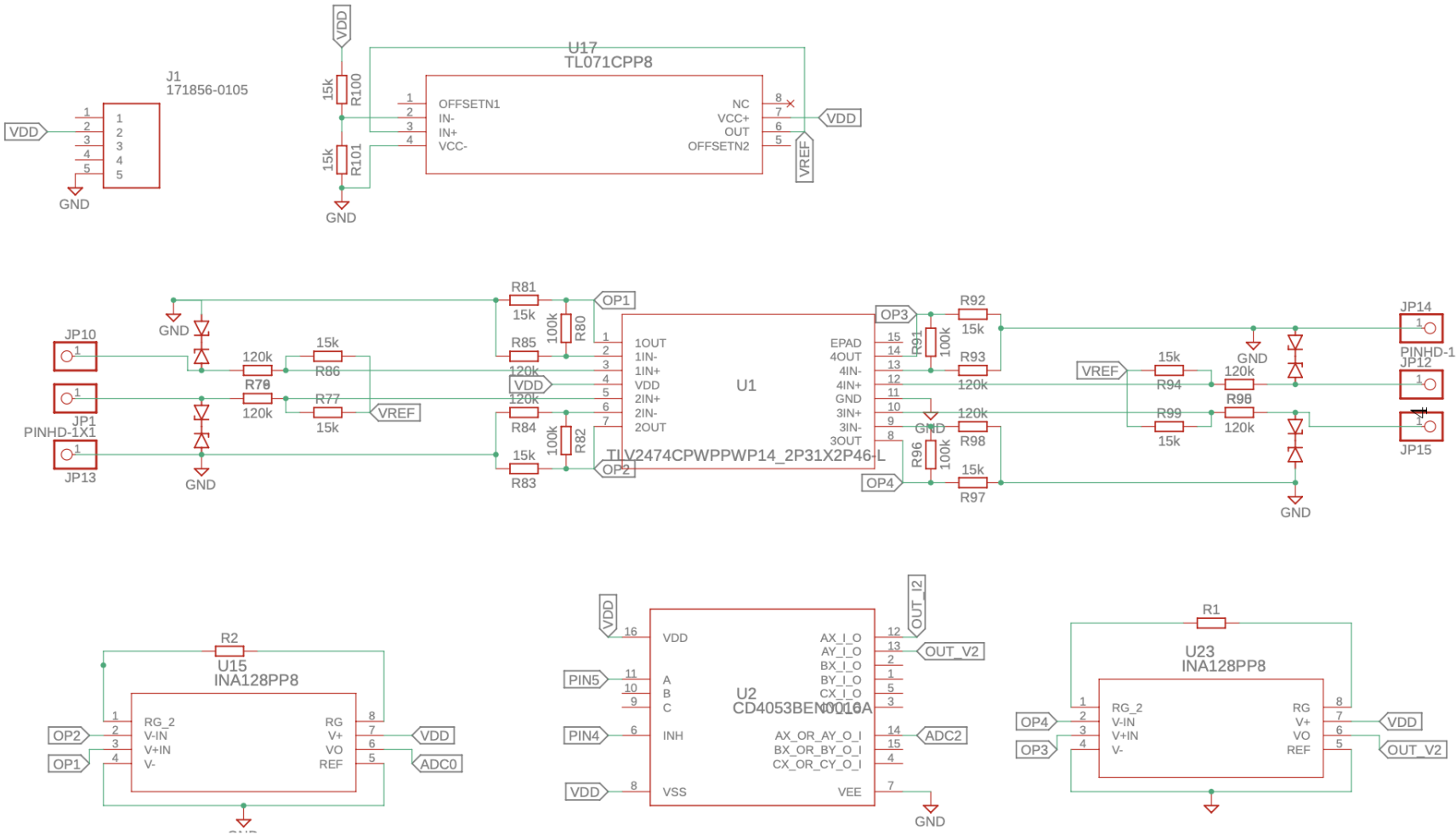

J1
171856-0105
VDD
GND
U17
TL071CPP8
OFFSETN1
IN-
IN+
VCC-
NC
VCC+
OUT
OFFSETN2
VREF
R100
R101
15k
JP10
JP1
PINHD-1X1
JP13
R70
R77
R86
120k
R81
R85
R84
R83
R80
R82
100k
OP1
OP2
OP3
OP4
U1
TLV2474CPWPPWP14_2P31X2P46-L
1OUT
1IN-
1IN+
VDD
2IN+
2IN-
2OUT
EPAD
4OUT
4IN-
4IN+
GND
3IN+
3IN-
3OUT
R91
R92
R93
R96
R97
R98
R94
R99
JP14
PINHD-1
JP12
JP15
R2
U15
INA128PP8
RG_2
V-IN
V+IN
V-
RG
V+
VO
REF
ADC0
U2
CD4053BEN0016A
A
B
C
INH
VSS
AX_I_O
AY_I_O
BX_I_O
BY_I_O
CX_I_O
AX_OR_AY_O_I
BX_OR_BY_O_I
CX_OR_CY_O_I
VEE
PIN5
PIN4
OUT_I2
OUT_V2
ADC2
R1
U23
INA128PP8

1.2 PCB Layout

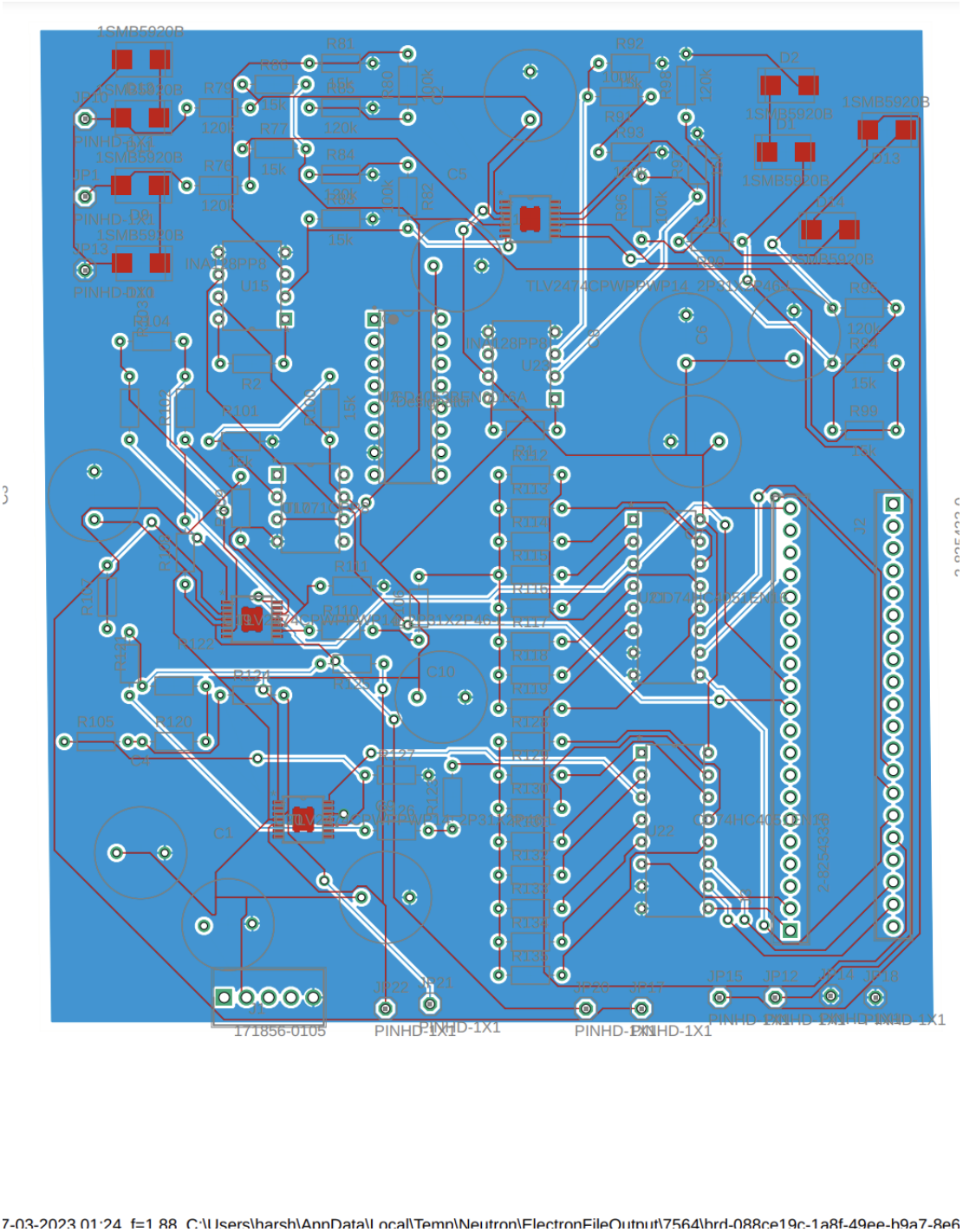

Figure 1:

1.3 CAD Design

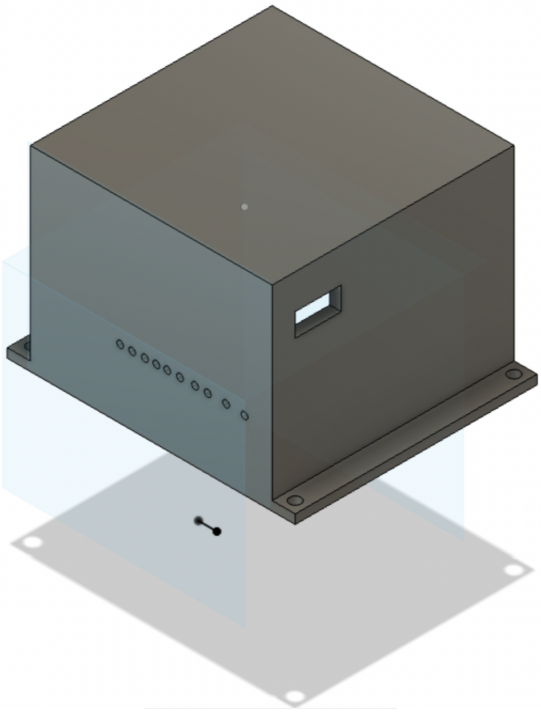

Figure 2: Home View

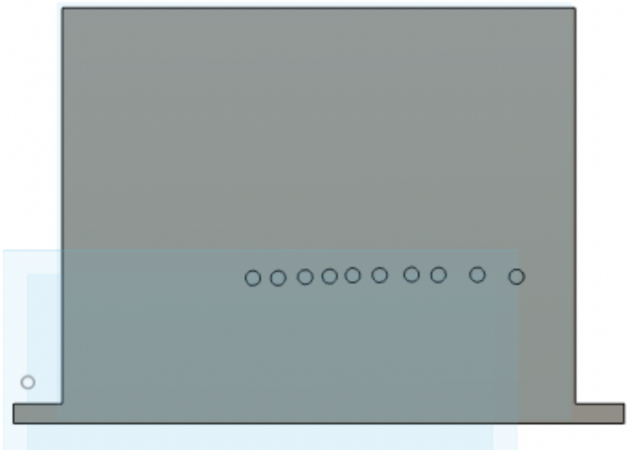

Figure 3: Front View

1.4 GUI

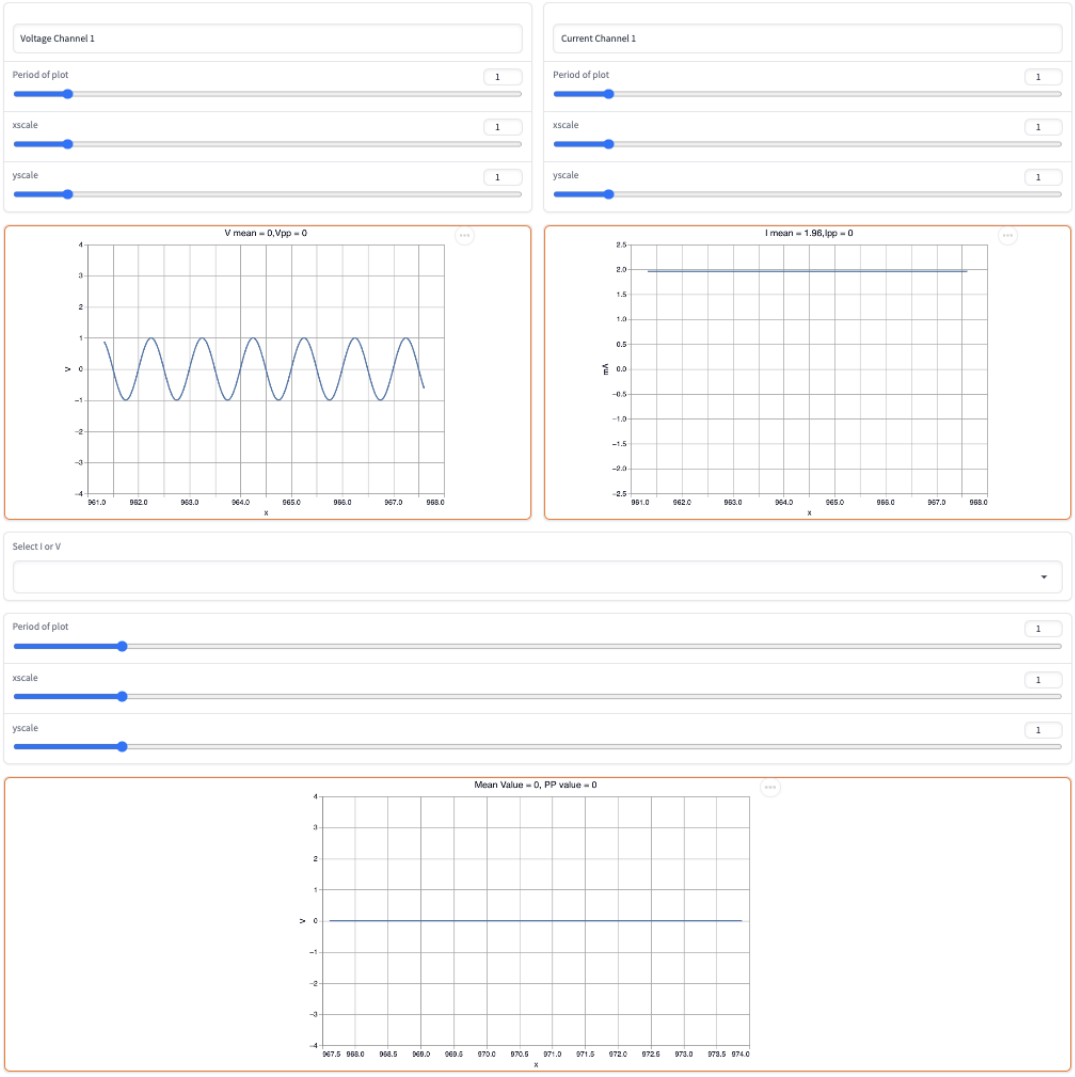

Figure 4: Web Based GUI

1.5 Bill Of Material

ITEMS	Quantity
TLV2474CPWP	2
INA128P	2
TL071CP	4
RPI PICO	1
HC05	1
USB Power Supply	1
CD74HC4051E	1

Figure 5: Bill Of Material extracted from Fusion360

1.6 Block Diagram

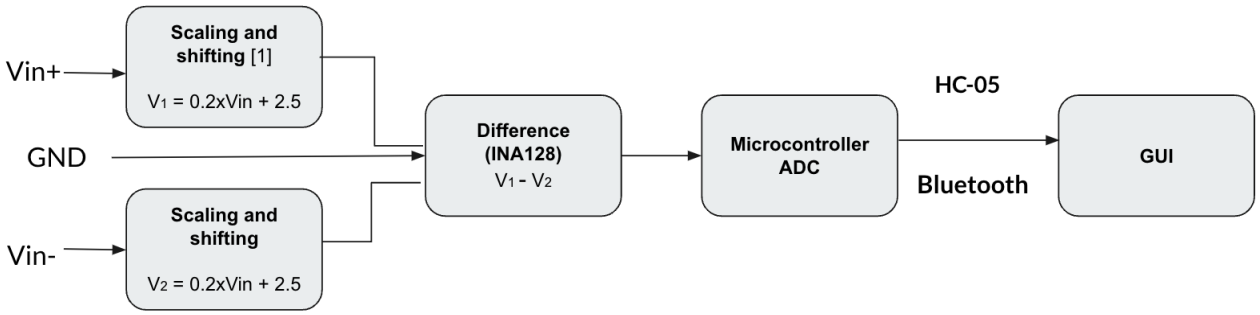

Figure 6: Block Diagram for Differential Voltage Input

2 Abstract and Motivation

Generally, Oscilloscope are bulky and can measure only single-sided voltage, We planned to make portable, Bluetooth-based oscilloscopes for differential inputs

Oscilloscope can not measure current, thus in this project, we planned to measure differential current and voltage using the device

It gives good exposure to different aspects of different fields including Analog front-end Designing, microcontroller programming, GUI designing, Bluetooth Communication, PCB designing and 3-D packaging

3 Results and Observations

We targetted to achieve the following Results

- Differential Input Voltage Range: -4V to 4V
- Differential Currential Sensing: 2.5mA

- Accuracy of more than 0.2V, 0.15mA
- 5V USB power supply
- Web Based GUI
- 2 Differential Current Inputs
- 2 Differential Voltage Inputs

We were able to achieve 5 out of them

- Differential Input Voltage Range: -4V to 4V
- Accuracy of more than 0.2V
- 5V USB Power Supply
- Web-Based GUI
- 2 Differential Voltage Inputs

4 Test Results

4.1 Voltage Scaling and shifting

With this circuit, We have scaled it down by a factor of 1/8 and shifted it by 2.5 volts to bring it in the range of 0 to 5. For this purpose we set resistor values as R2, RF equals 15k ohms, and R1, Rg equals 120k ohms

Input Voltage	Expected Output Voltage	Output Voltage
-16	0.5	0.56
-8	1.5	1.49
-4	2	1.93
4	3	2.95
8	3.5	3.47
12	4	4.02
16	4.5	4.34
20	5	4.95

4.2 I to V converter

We are getting unpredictable outputs for this, till now, we have tried it on simulation tool and on breadboard.

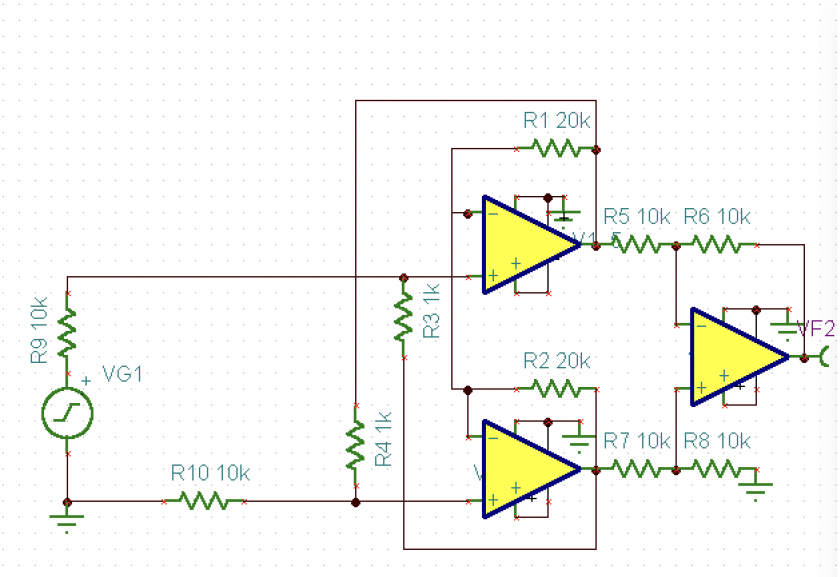

Figure 7: I to V conversion Circuit for simulation in Tina-Ti

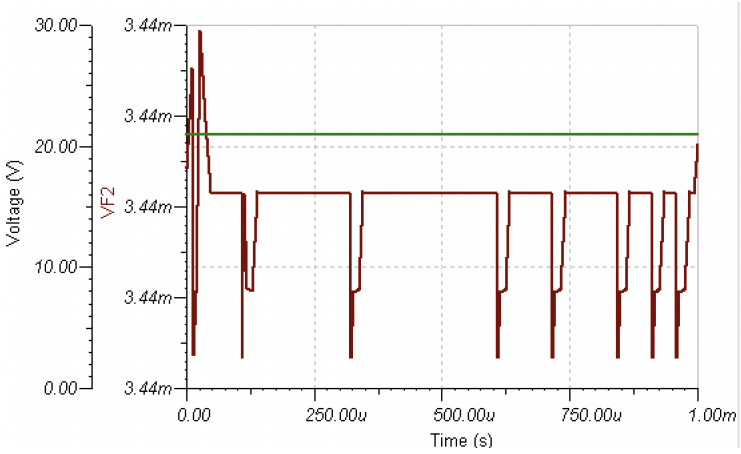

Figure 8: Simulation Results

4.3 Statement of Contribution

- Harsh Choudhary: Designing, Testing, Soldering, Report Making, Schematic Making, Pcb Desgning, Programming Microcontroller, Making GUI
- Abhinav Ghunawat: 3D packaging, Current-Voltage Convertor Testing
- Harsh Lulla: PCB designing, Schematic, Testing

5 Conclusions and Future Work

- More than 3 weeks were spent in searching for the I to V converter and it was tested multiple times by all 3 groups but it did not work.
- For using bluetooth module, MacOS is the best option, windows and ubuntu have multiple complications
- We can increase the input voltage range by increasing the voltage of the power supply and using rail-to-rail opamp
- We can increase the accuracy by reducing the scale-down factor and by using digital-pots for scaling

6 Important Links

- Github Repository
  https://github.com/HC1608/Differential-Input-Oscilloscope
- Demo-Video
  https://shorturl.at/ltX04
- Presentation
  https://rb.gy/5xjz2

7 References

1. Guide for Rpi pico https://projects.raspberrypi.org/en/projects/getting-started-with-the-pico/3
2. Guide for Bluetooth https://howtomechatronics.com/tutorials/arduino/arduino-and-hc-05-bluetooth-module-tutorial/
3. Guide for Debugging Bluetooth https://www.verizon.com/support/knowledge-base-20605/
4. Documentation for the GUI https://gradio.app/docs/
5. I to V converter from Pg no.156 Burr-Brown-The handbook of linear IC applications
6. I to V conversion using sense resistance, application note of INA 240
7. Voltage Converter and shifter from Section 4-9 Op Amps for Everyone by Ron Mancini