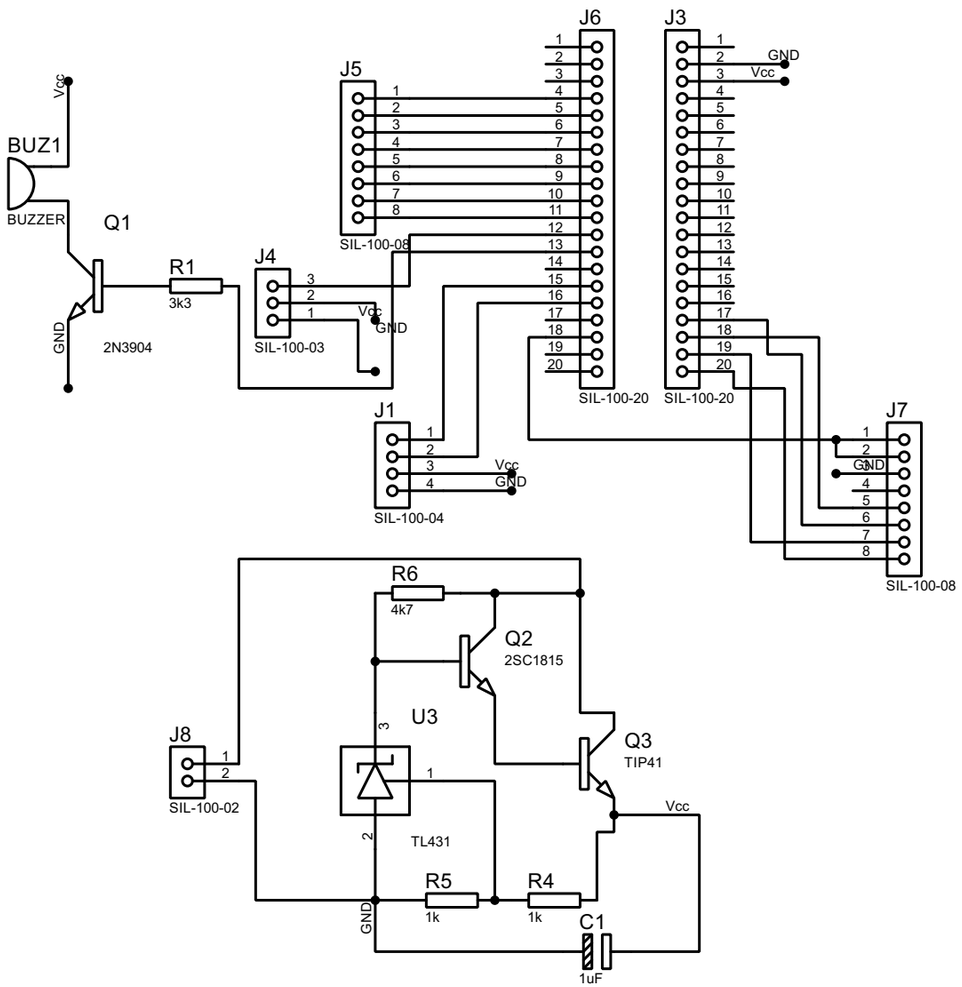

FILE NAME: stm32 - Copy.pdsprj	DATE: 11/21/2024
DESIGN TITLE: stm32 - Copy.pdsprj	
PATH: C:\Users\NHAT DONG\OneDrive\Documents\stm32 - Copy.pdsprj	PAGE: 1 of 1
BY: @AUTHOR REV:@REV	TIME: 8:20:27 PM
BOARD: @BOARD	