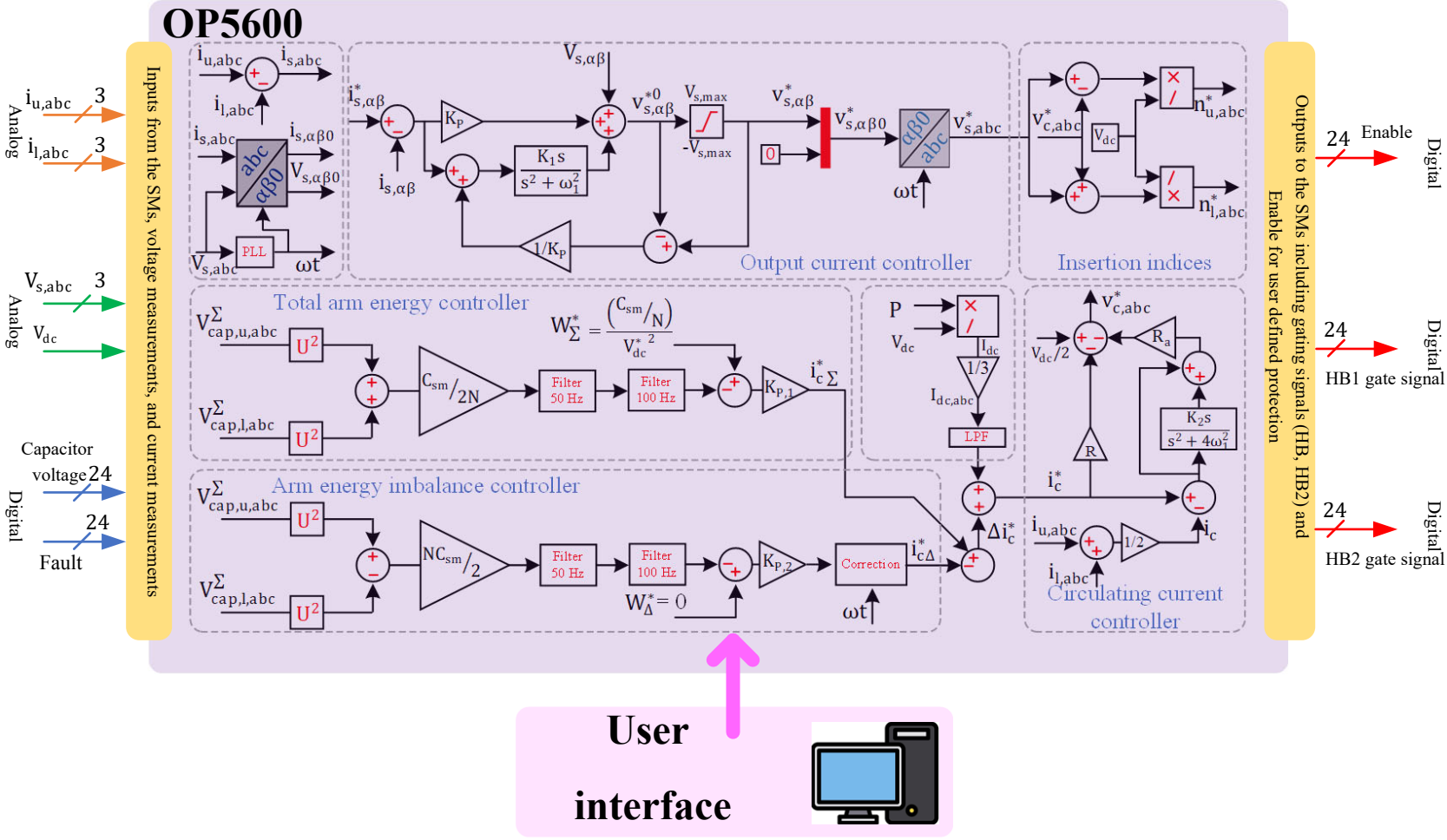
OP5600
Analog
Digital
Inputs from the SMs, voltage measurements, and current measurements
Outputs to the SMs including gating signals (HB, HB2) and Enable for user defined protection
Capacitor voltage
Fault
Enable
HB1 gate signal
HB2 gate signal
Output current controller
Insertion indices
Total arm energy controller
Arm energy imbalance controller
Circulating current controller
Filter 50 Hz
Filter 100 Hz
Correction
PLL
LPF
User interface