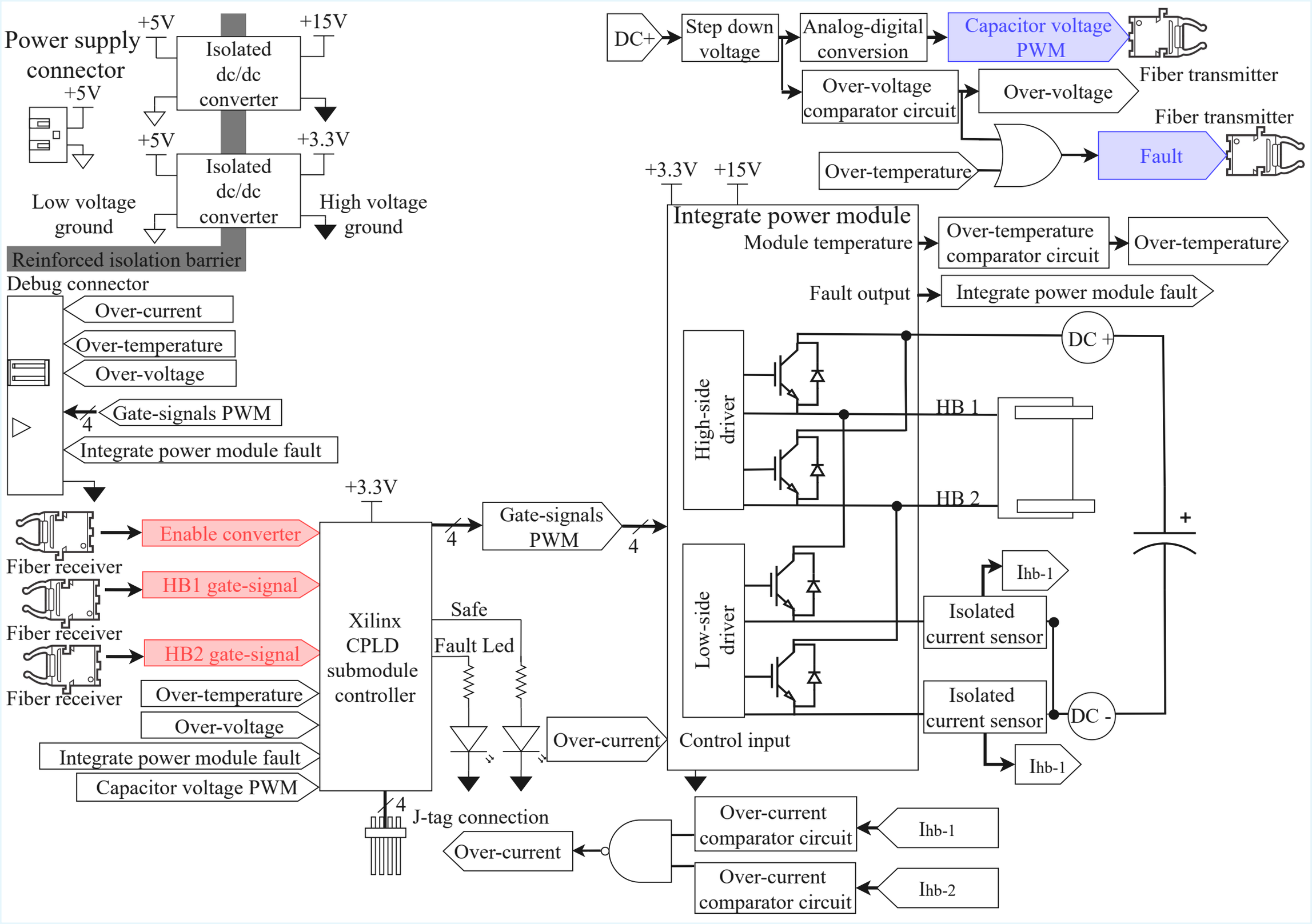
Power supply connector
+5V
+15V
Isolated dc/dc converter
+5V
+5V
+3.3V
Isolated dc/dc converter
Low voltage ground
High voltage ground
Reinforced isolation barrier
Debug connector
Over-current
Over-temperature
Over-voltage
Gate-signals PWM
4
Integrate power module fault
Fiber receiver
Fiber receiver
Fiber receiver
Enable converter
HB1 gate-signal
HB2 gate-signal
Over-temperature
Over-voltage
Integrate power module fault
Capacitor voltage PWM
+3.3V
Xilinx CPLD submodule controller
4
Gate-signals PWM
4
Safe
Fault Led
Over-current
4
J-tag connection
Over-current
DC+
Step down voltage
Analog-digital conversion
Capacitor voltage PWM
Fiber transmitter
Over-voltage comparator circuit
Over-voltage
Fiber transmitter
Over-temperature
Fault
+3.3V
+15V
Integrate power module
Module temperature
Over-temperature comparator circuit
Over-temperature
Fault output
Integrate power module fault
DC +
High-side driver
HB 1
HB 2
+
Low-side driver
Ihb-1
Isolated current sensor
Isolated current sensor
DC -
Control input
Ihb-1
Over-current comparator circuit
Ihb-1
Over-current comparator circuit
Ihb-2