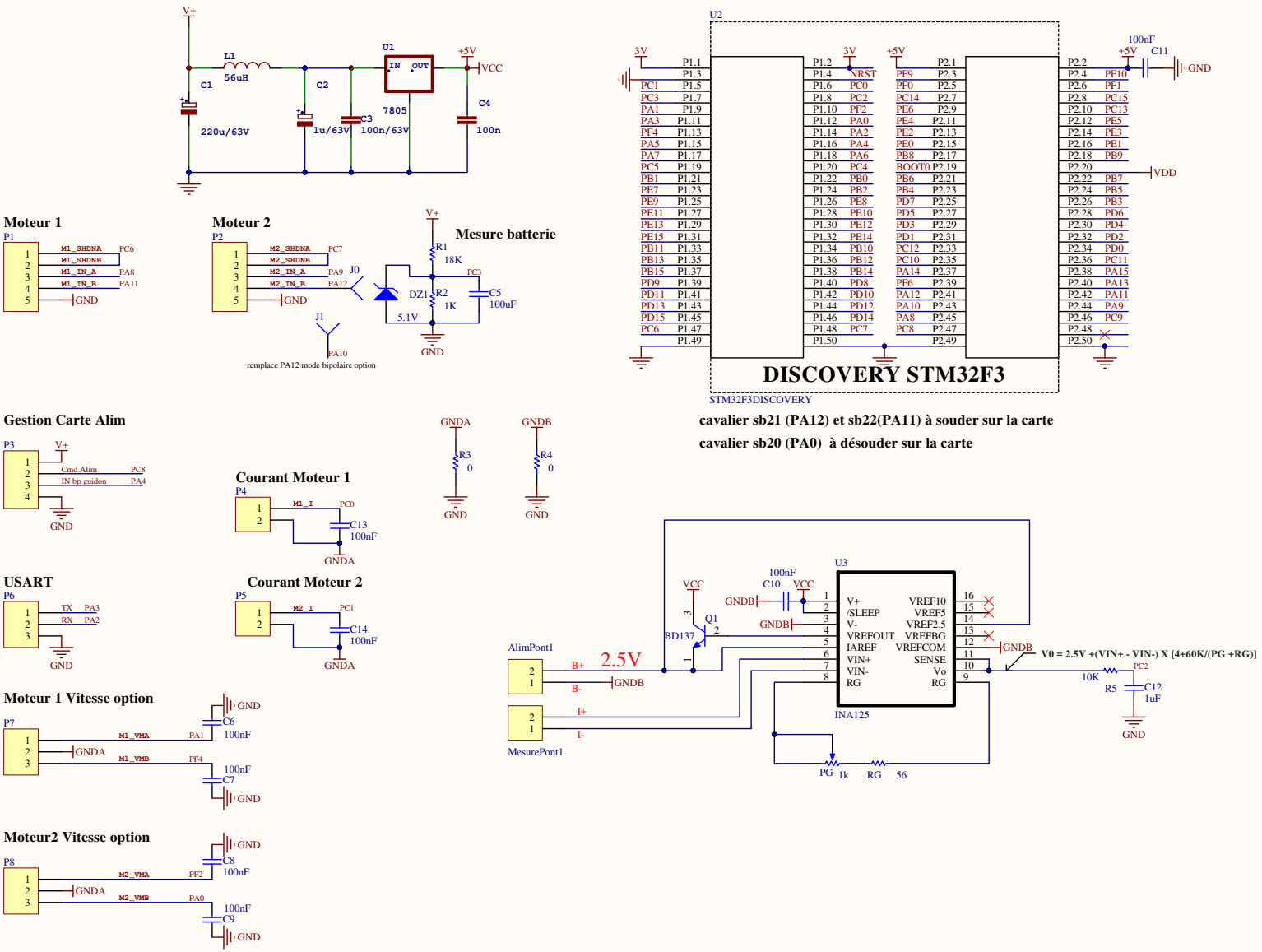

Title	CARTE MICRO	
Size A3	Number	Revision
Date: 09/06/2017	Sheet of	
File: D:\Altium\..\Carte_micro.SchDoc	Drawn By:	