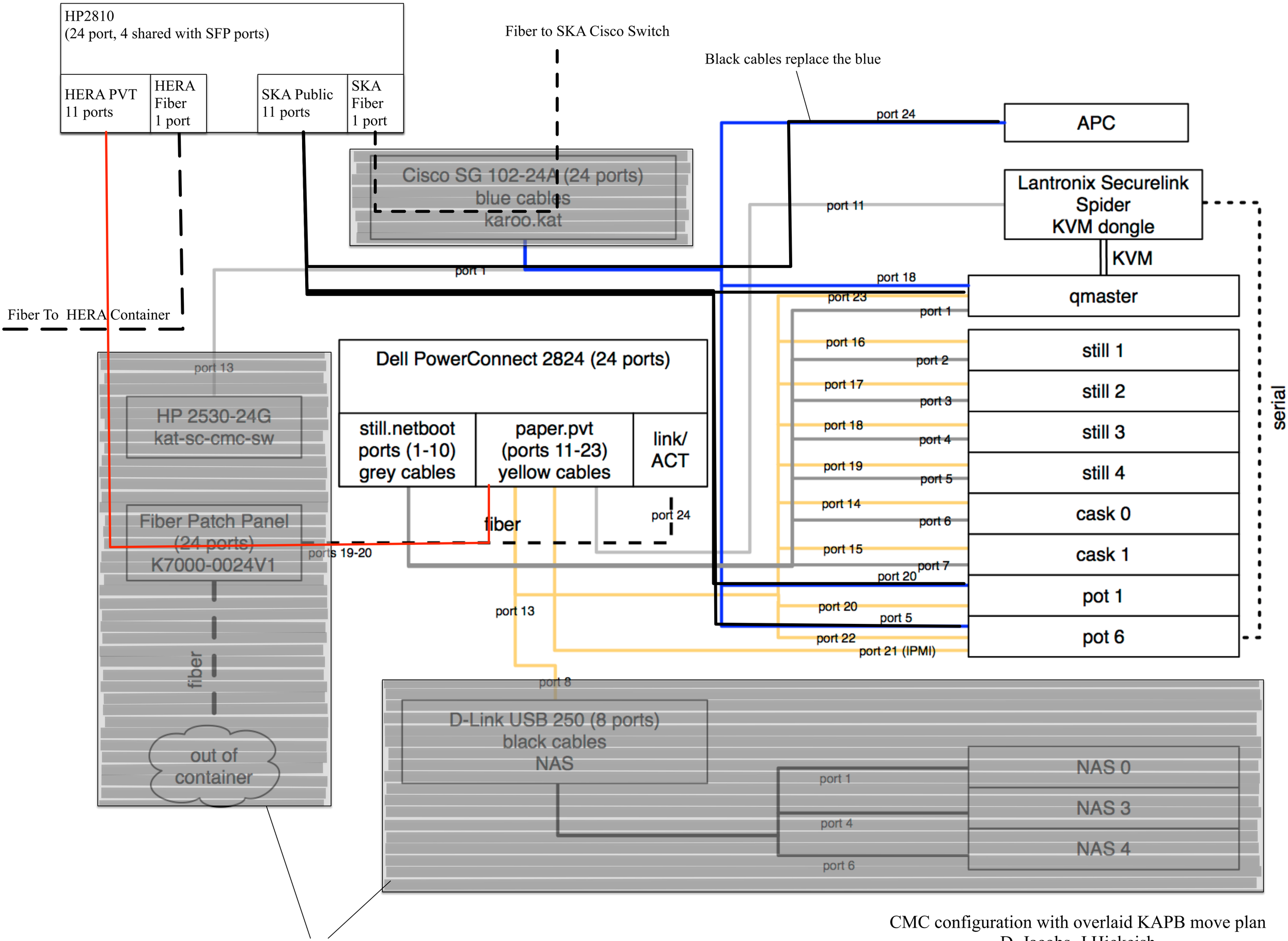

Things in the CMC configuration which we aren't carrying over to the KAPB

CMC configuration with overlaid KAPB move plan
D. Jacobs, J Hickeish
4 May 2017