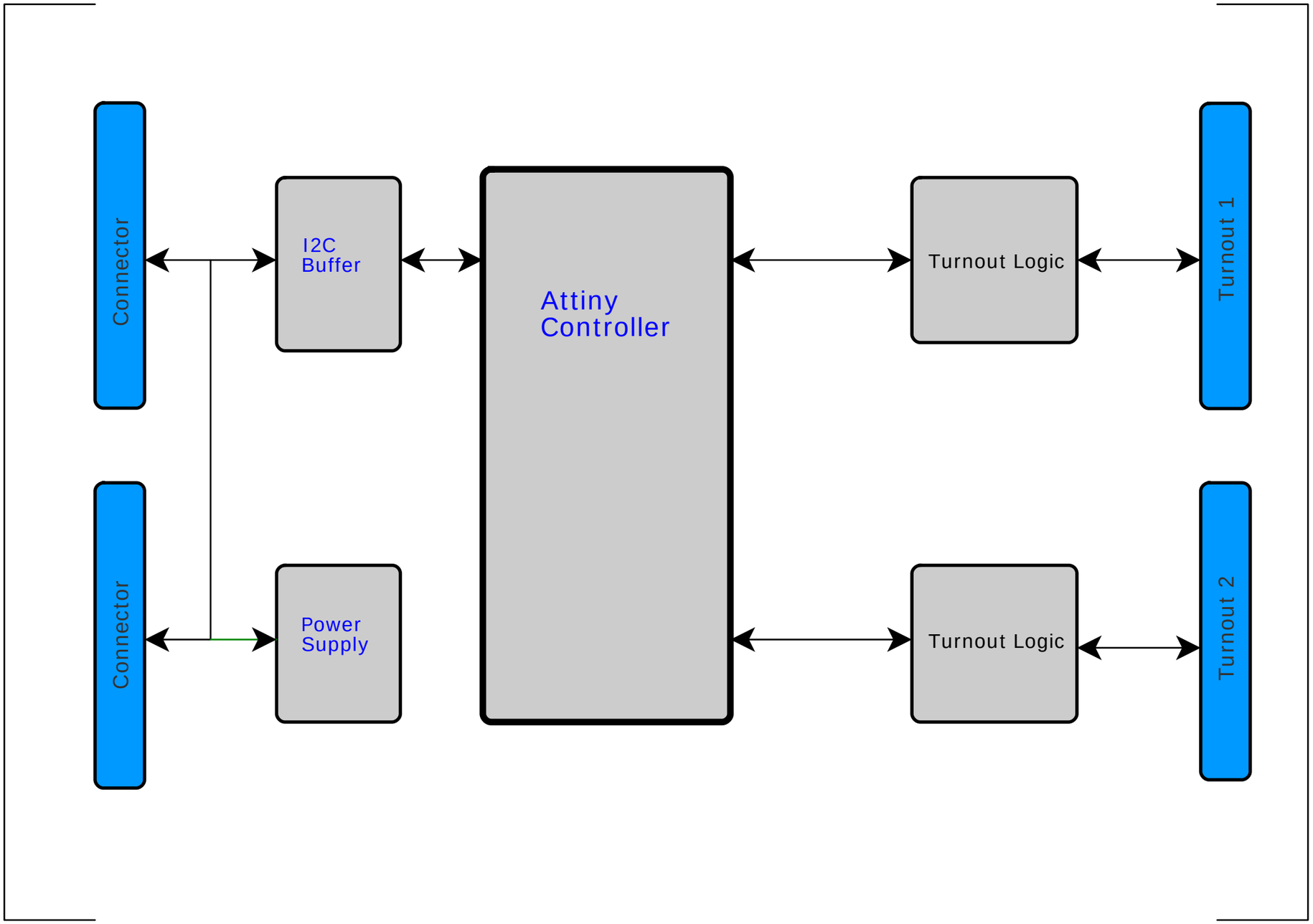
Connector
Connector
I2C
Buffer
Power
Supply
Attiny
Controller
Turnout Logic
Turnout Logic
Turnout 1
Turnout 2

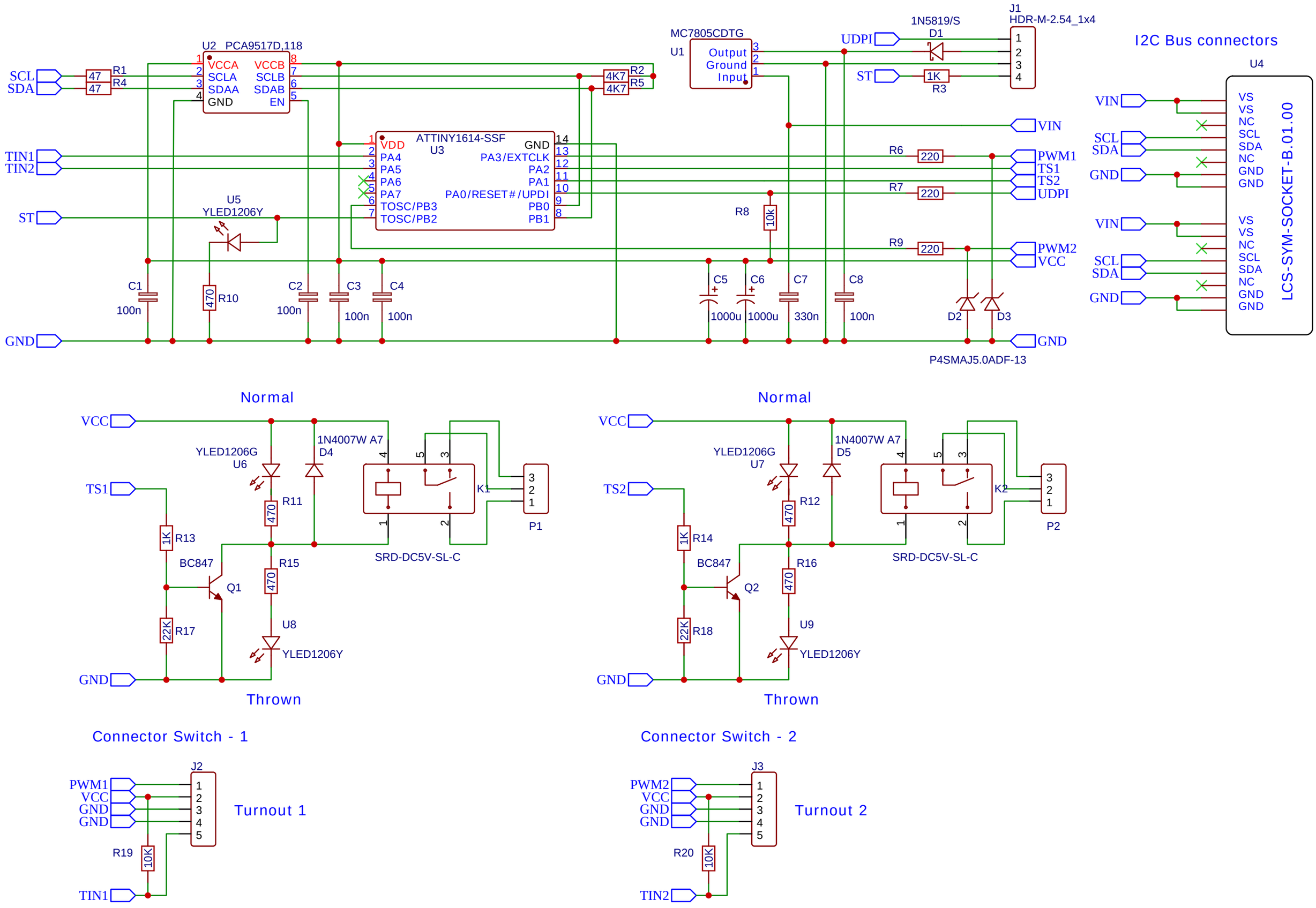
U2 PCA9517D,118
VCCA
SCLA
SDAA
GND
VCCB
SCLB
SDAB
EN
SCL
SDA
R1
R4
47
47
4K7
4K7
R2
R5
ATTINY1614-SSF
U3
VDD
PA4
PA5
PA6
PA7
TOSC/PB3
TOSC/PB2
GND
PA3/EXTCLK
PA2
PA1
PA0/RESET#/UPDI
PB0
PB1
TIN1
TIN2
ST
U5
YLED1206Y
R10
470
C1
100n
C2
100n
C3
100n
C4
100n
MC7805CDTG
U1
Output
Ground
Input
UDPI
1N5819/S
D1
ST
1K
R3
J1
HDR-M-2.54_1x4
VIN
R6
220
R7
220
R8
10k
R9
220
PWM1
TS1
TS2
UDPI
PWM2
VCC
C5
1000u
C6
1000u
C7
330n
C8
100n
D2
D3
P4SMAJ5.0ADF-13
GND
I2C Bus connectors
U4
VIN
SCL
SDA
GND
VS
VS
NC
SCL
SDA
NC
GND
GND
LCS-SYM-SOCKET-B.01.00
Normal
VCC
YLED1206G
U6
1N4007W A7
D4
TS1
R11
470
R13
1K
BC847
Q1
R15
470
R17
22K
U8
YLED1206Y
K1
SRD-DC5V-SL-C
P1
Thrown
Connector Switch - 1
Normal
VCC
YLED1206G
U7
1N4007W A7
D5
TS2
R12
470
R14
1K
BC847
Q2
R16
470
R18
22K
U9
YLED1206Y
K2
SRD-DC5V-SL-C
P2
Thrown
Connector Switch - 2
J2
PWM1
VCC
GND
GND
R19
10K
TIN1
Turnout 1
J3
PWM2
VCC
GND
GND
R20
10K
TIN2
Turnout 2