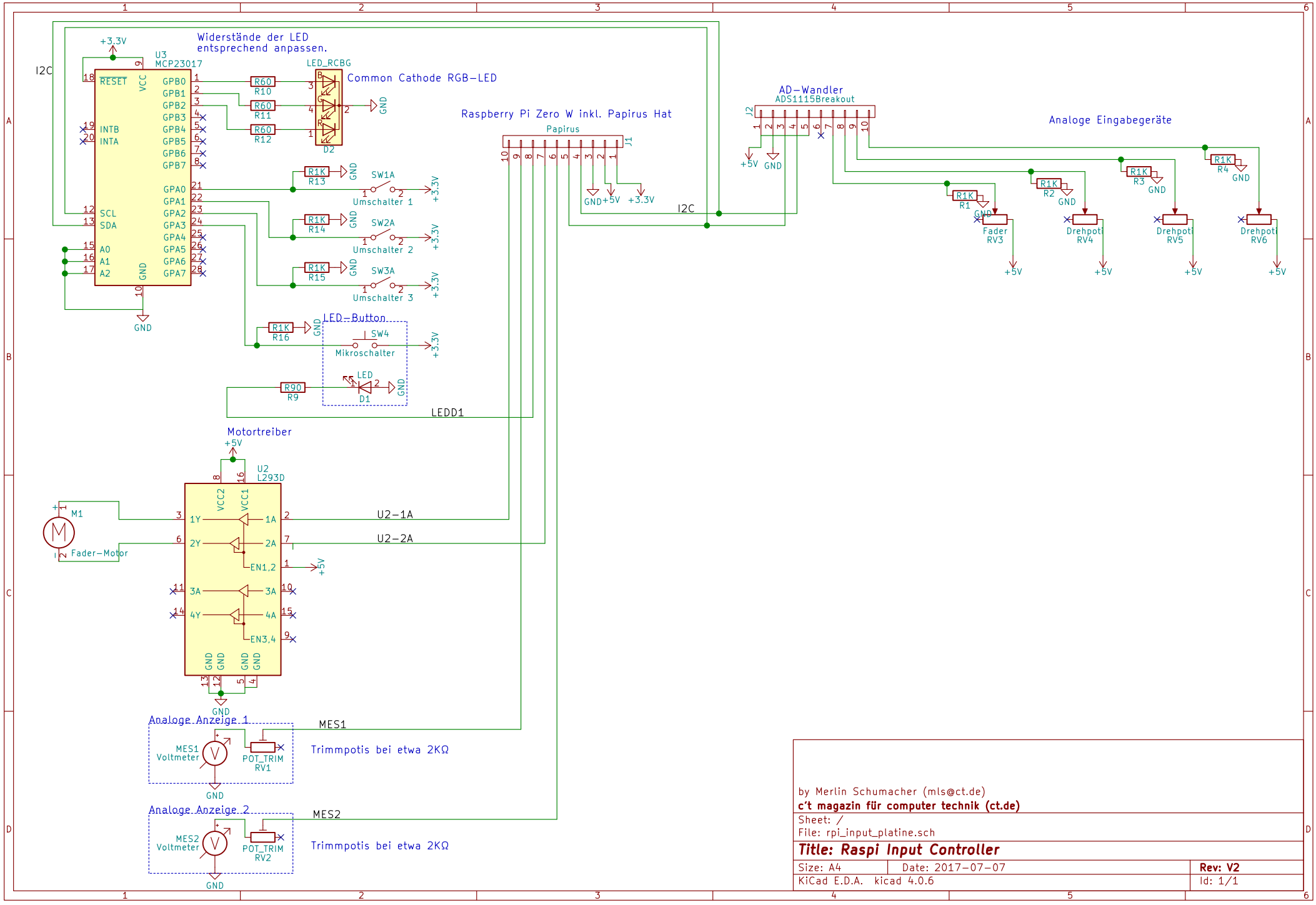

by Merlin Schumacher (mls@ct.de)
c't magazin für computer technik (ct.de)

Sheet: /
File: rpi_input_platine.sch

Title: Raspi Input Controller

Size: A4	Date: 2017-07-07	**Rev: V2**
KiCad E.D.A. kicad 4.0.6		Id: 1/1