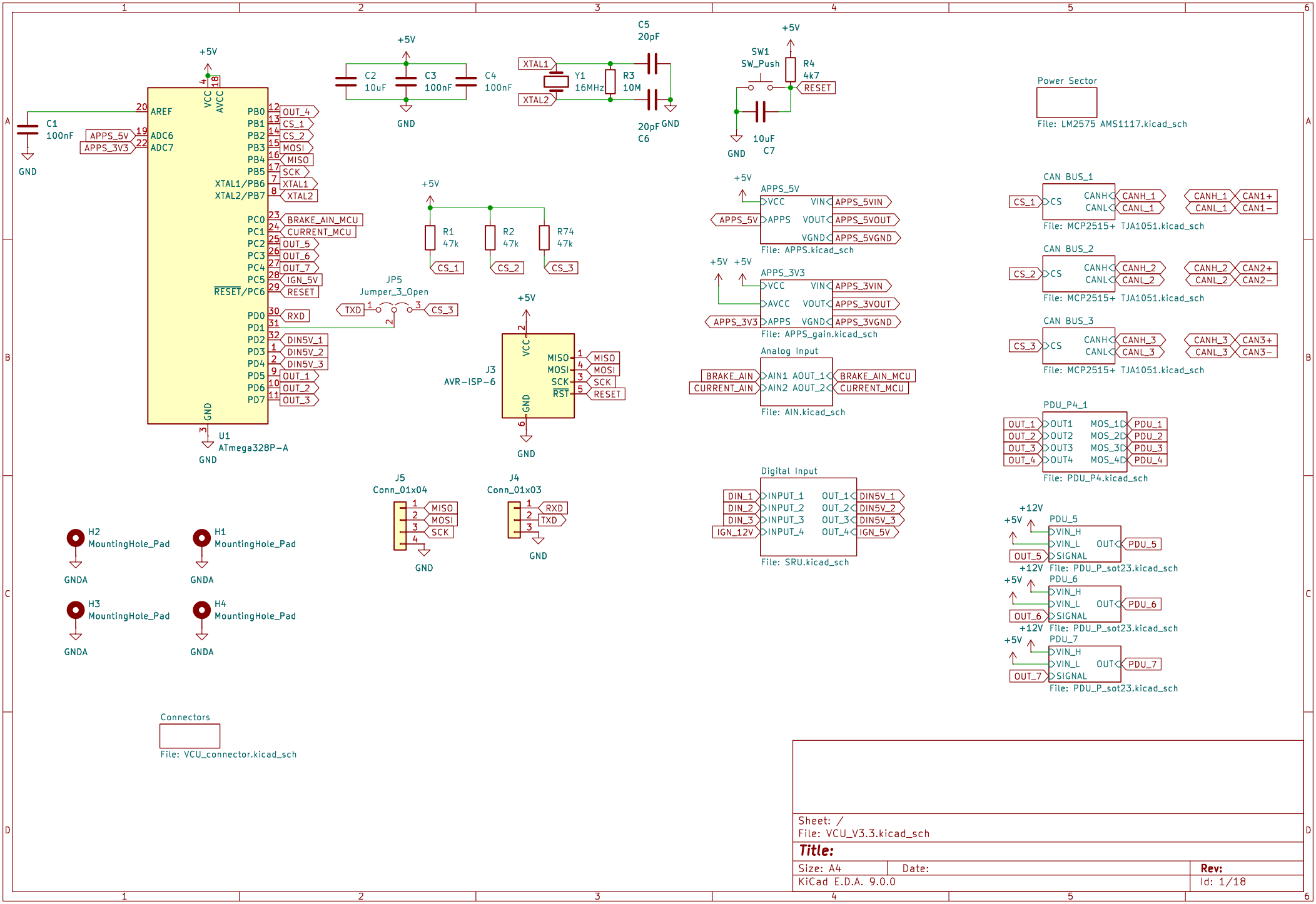

Sheet: /
File: VCU_V3.3.kicad_sch

Title:

Size: A4	Date:	Rev:
KiCad E.D.A. 9.0.0		Id: 1/18

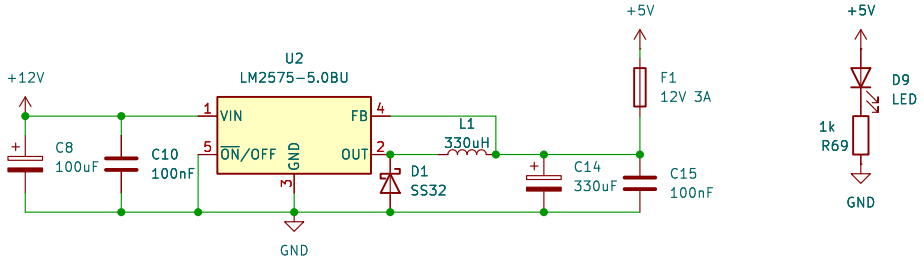

Sheet: /Power Sector/
File: LM2575 AMS1117.kicad_sch

Title:

Size: A4	Date:	**Rev:**
KiCad E.D.A. 9.0.0		Id: 2/18

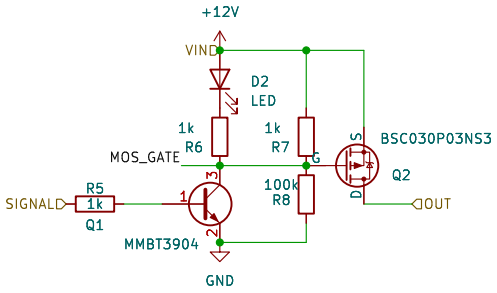

Sheet: /PDU_P4_1/PDU_1/
File: PDU_P.kicad_sch

Title:

Size: A4	Date:	Rev:
KiCad E.D.A. 9.0.0		Id: 3/18

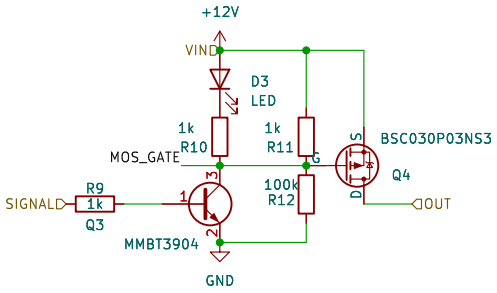

Sheet: /PDU_P4_1/PDU_2/
File: PDU_P.kicad_sch

Title:

Size: A4	Date:	Rev:
KiCad E.D.A. 9.0.0		Id: 4/18

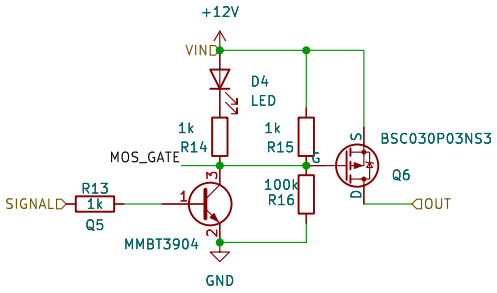

Sheet: /PDU_P4_1/PDU_3/
File: PDU_P.kicad_sch

Title:

Size: A4	Date:	Rev:
KiCad E.D.A. 9.0.0		Id: 5/18

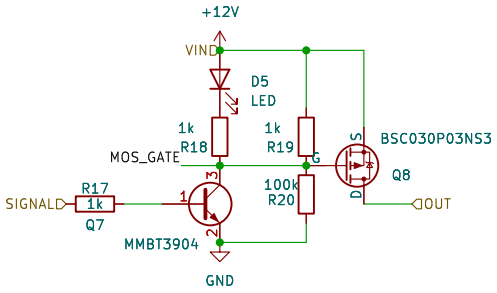

Sheet: /PDU_P4_1/PDU_4/
File: PDU_P.kicad_sch

Title:

Size: A4	Date:	**Rev:**
KiCad E.D.A. 9.0.0		Id: 6/18

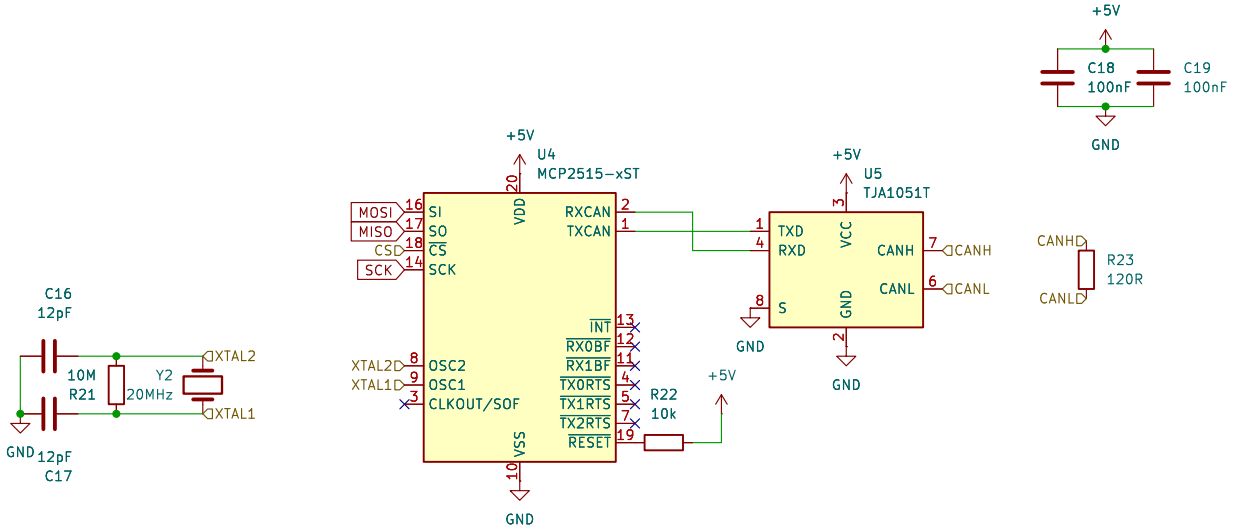

Sheet: /CAN BUS_1/
File: MCP2515+ TJA1051.kicad_sch

Title:

Size: A4	Date:	**Rev:**
KiCad E.D.A. 9.0.0		Id: 7/18

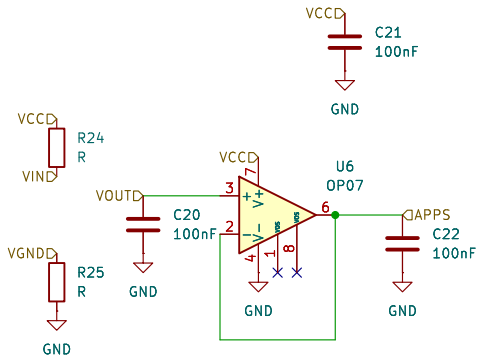

Sheet: /APPS_5V/
File: APPS.kicad_sch

Title:

Size: A4	Date:	**Rev:**
KiCad E.D.A. 9.0.0		Id: 8/18

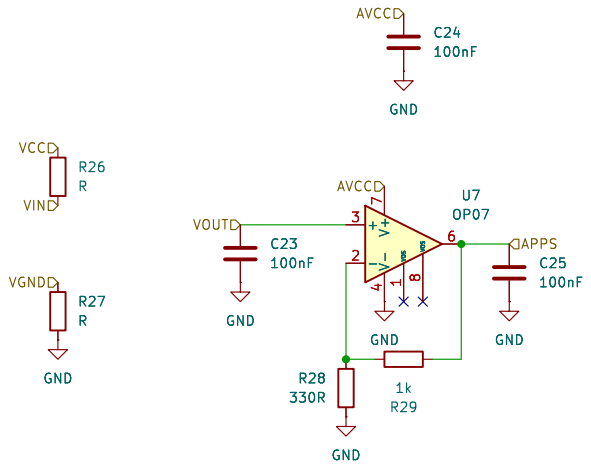

Sheet: /APPS_3V3/
File: APPS_gain.kicad_sch

Title:

Size: A4	Date:	Rev:
KiCad E.D.A. 9.0.0		Id: 9/18

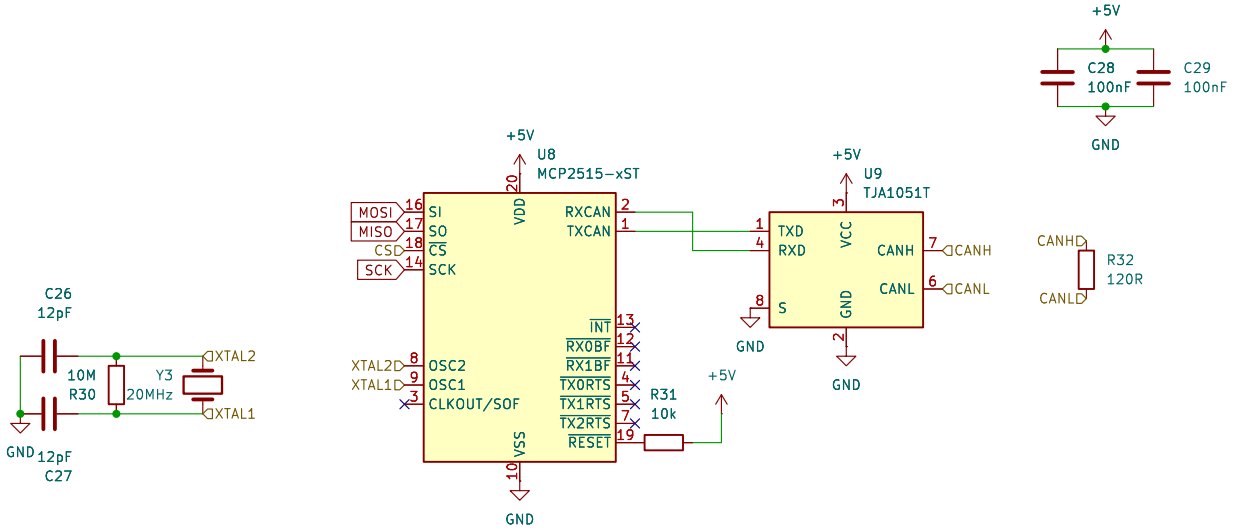

Sheet: /CAN BUS_2/
File: MCP2515+ TJA1051.kicad_sch

Title:

Size: A4	Date:	**Rev:**
KiCad E.D.A. 9.0.0		Id: 10/18

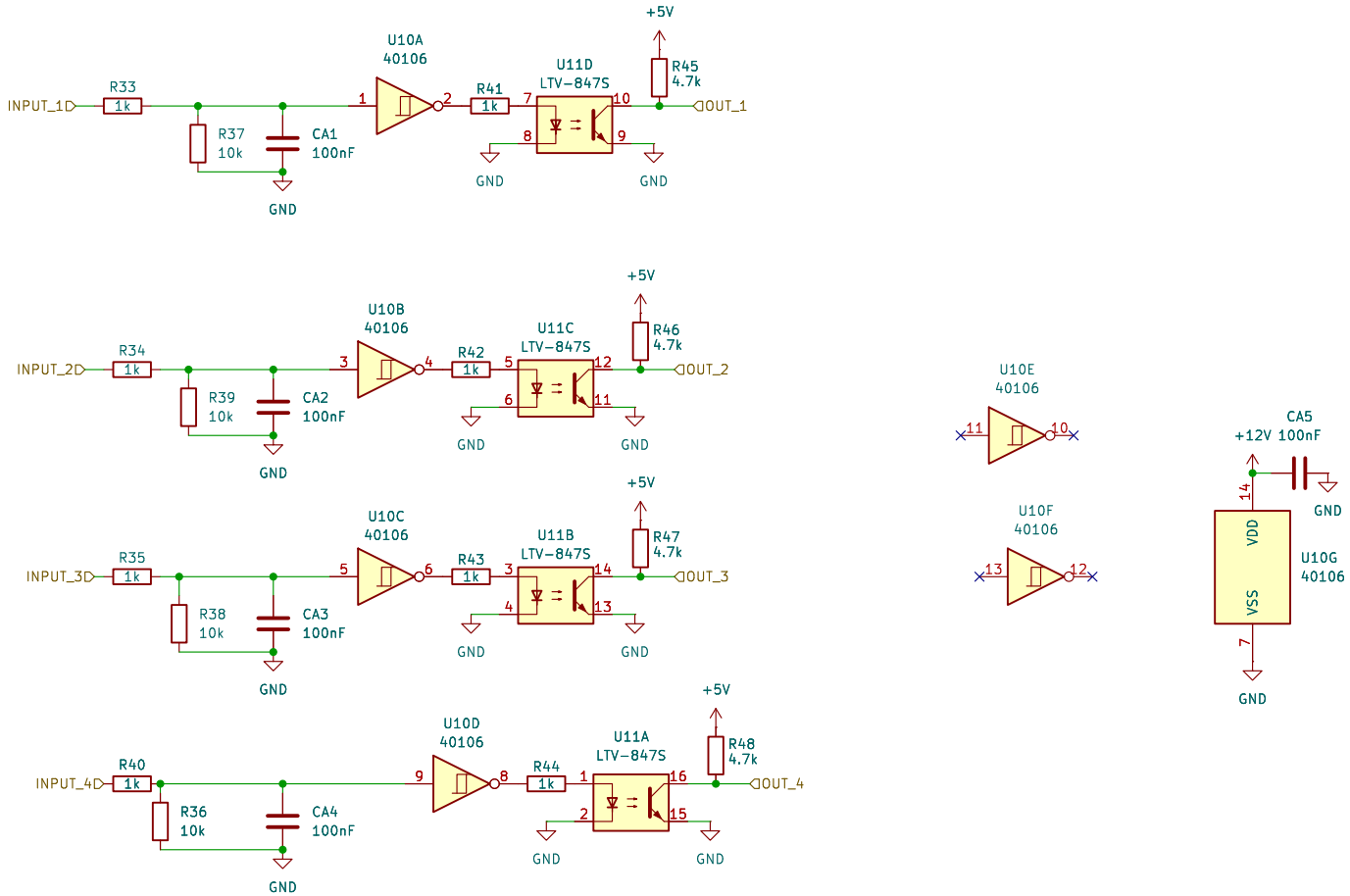

Sheet: /Digital Input/
File: SRU.kicad_sch

Title:

Size: A4	Date:	Rev:
KiCad E.D.A. 9.0.0		Id: 11/18

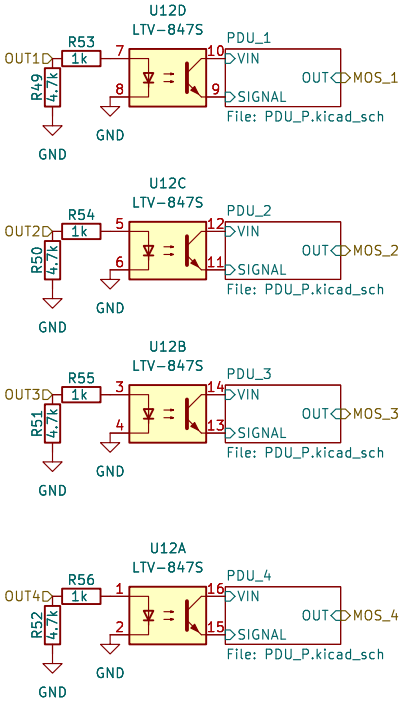

Sheet: /PDU_P4_1/
File: PDU_P4.kicad_sch

Title:

Size: A4	Date:	**Rev:**
KiCad E.D.A. 9.0.0		Id: 12/18

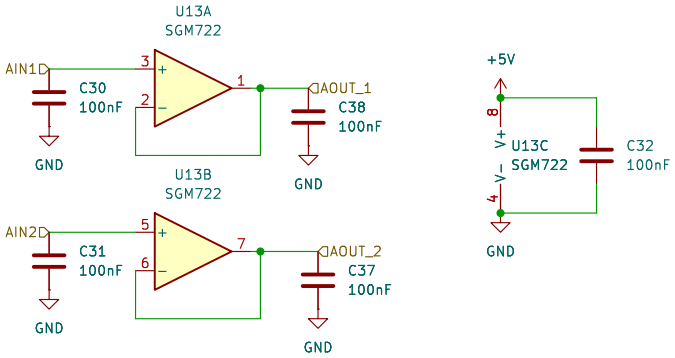

Sheet: /Analog Input/
File: AIN.kicad_sch

Title:

Size: A4	Date:	**Rev:**
KiCad E.D.A. 9.0.0		Id: 13/18

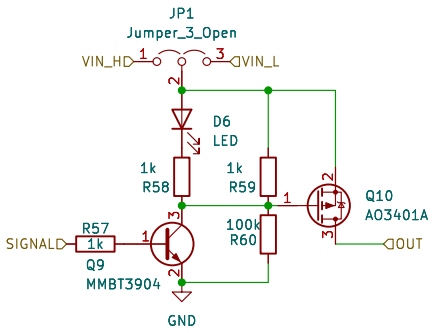

Sheet: /PDU_5/
File: PDU_P_sot23.kicad_sch

Title:

Size: A4	Date:	**Rev:**
KiCad E.D.A. 9.0.0		Id: 14/18

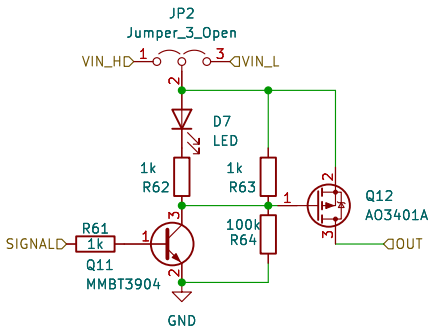

Sheet: /PDU_6/
File: PDU_P_sot23.kicad_sch

Title:

Size: A4	Date:	**Rev:**
KiCad E.D.A. 9.0.0		Id: 15/18

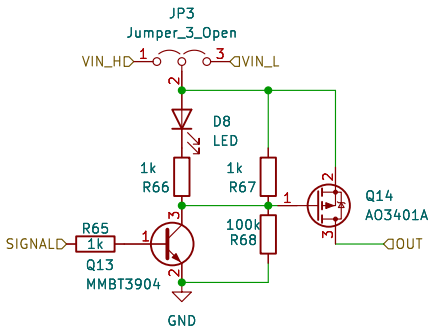

Sheet: /PDU_7/
File: PDU_P_sot23.kicad_sch

Title:

Size: A4	Date:	**Rev:**
KiCad E.D.A. 9.0.0		Id: 16/18

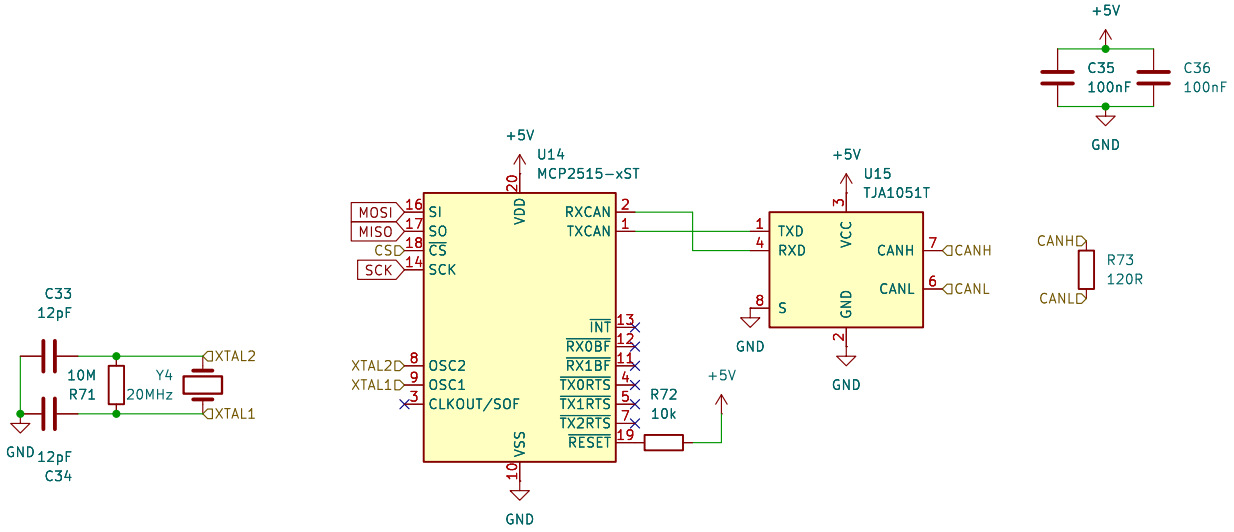

Sheet: /CAN BUS_3/
File: MCP2515+ TJA1051.kicad_sch

Title:

Size: A4	Date:	**Rev:**
KiCad E.D.A. 9.0.0		Id: 17/18

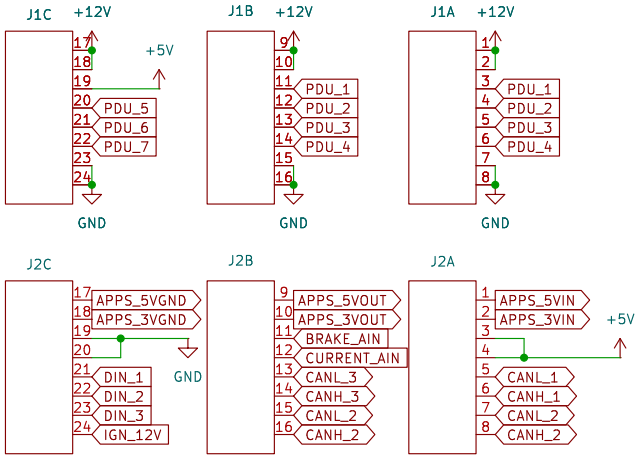

Sheet: /Connectors/
File: VCU_connector.kicad_sch

Title:

Size: A4	Date:	Rev:
KiCad E.D.A. 9.0.0		Id: 18/18