CAN Controller

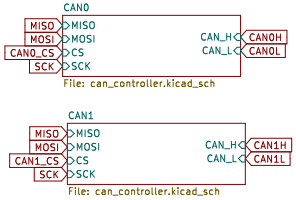

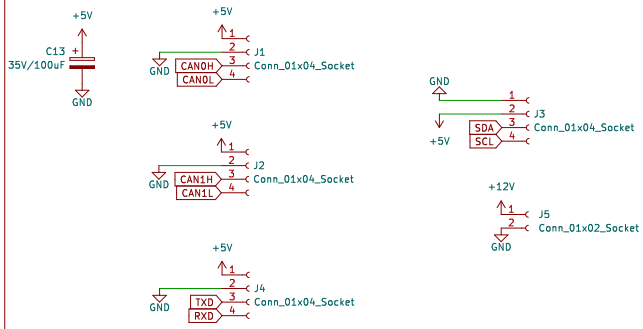

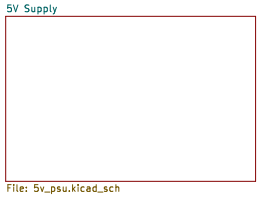

ATmega328P

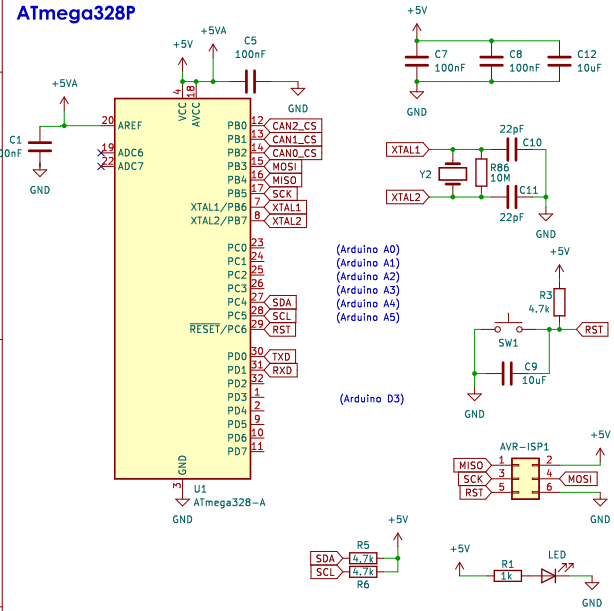

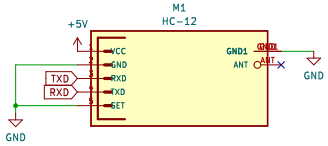

Sheet: /
File: front_dash_unit.kicad_sch

Title: CAN Brake Board

Size: A3	Date: 2023-12-04	Rev: 1.4
KiCad E.D.A. kicad 7.0.11-rc3		Id: 1/4

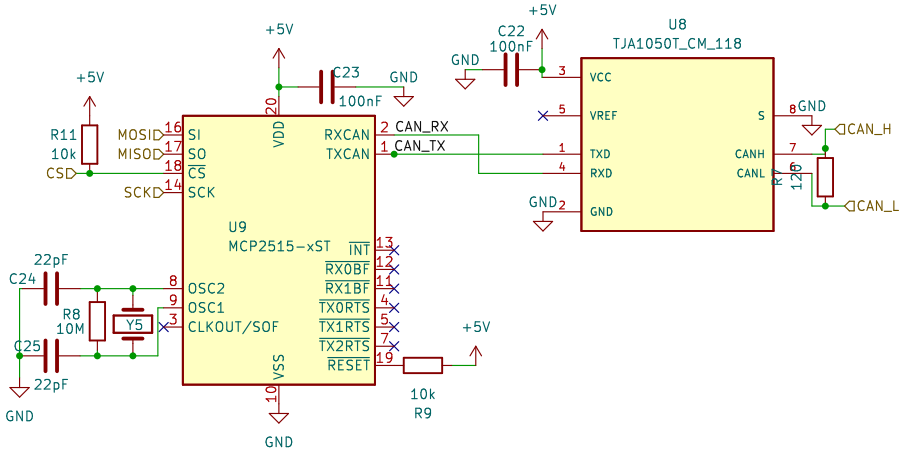

Sheet: /CAN0/
File: can_controller.kicad_sch

Title:

Size: A4	Date:	Rev:
KiCad E.D.A. kicad 7.0.11-rc3		Id: 2/4

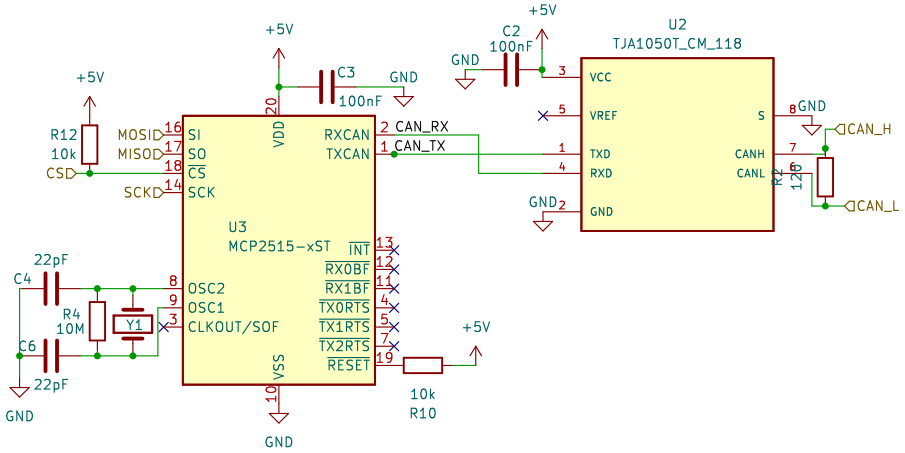

Sheet: /CAN1/
File: can_controller.kicad_sch

Title:

Size: A4	Date:	Rev:
KiCad E.D.A. kicad 7.0.11-rc3		Id: 3/4

POWER

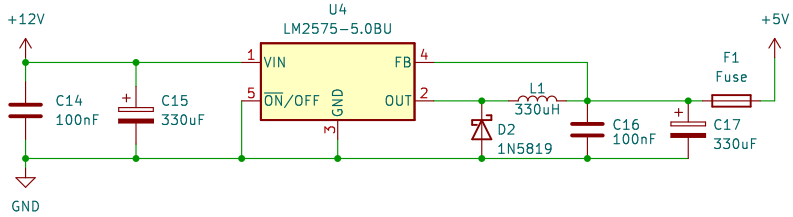

Sheet: /5V Supply/
File: 5v_psu.kicad_sch

Title:

Size: A4	Date:	Rev:
KiCad E.D.A. kicad 7.0.11-rc3		Id: 4/4