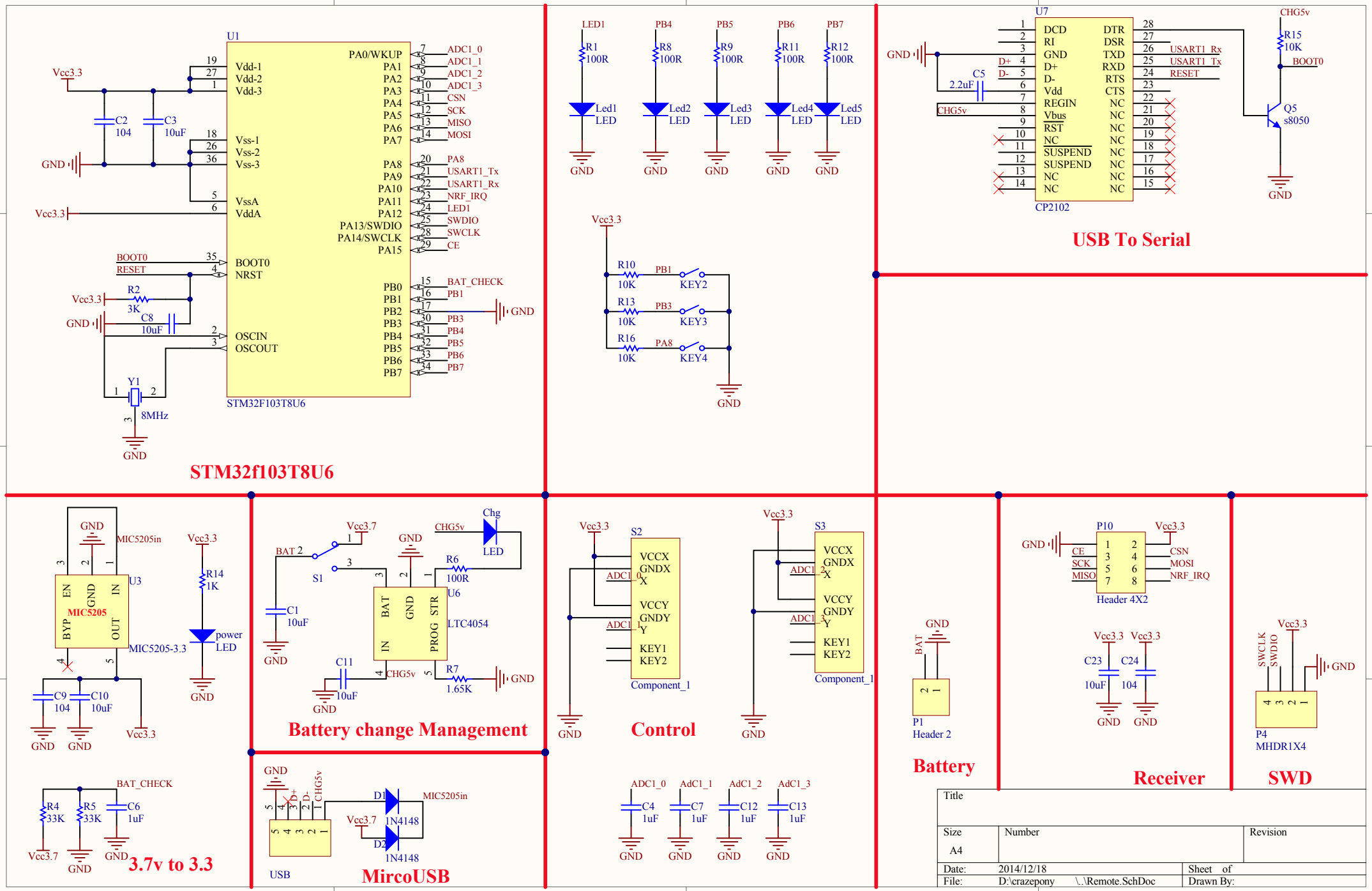
STM32f103T8U6
U1
STM32F103T8U6
Vdd-1
Vdd-2
Vdd-3
Vss-1
Vss-2
Vss-3
VssA
VddA
BOOT0
NRST
OSCIN
OSCOUT
PA0/WKUP
PA1
PA2
PA3
PA4
PA5
PA6
PA7
PA8
PA9
PA10
PA11
PA12
PA13/SWDIO
PA14/SWCLK
PA15
PB0
PB1
PB2
PB3
PB4
PB5
PB6
PB7
ADC1_0
ADC1_1
ADC1_2
ADC1_3
CSN
SCK
MISO
MOSI
USART1_Tx
USART1_Rx
NRF_IRQ
LED1
SWDIO
SWCLK
CE
BAT_CHECK
Vcc3.3
GND
C2 104
C3 10uF
R2 3K
C8 10uF
Y1 8MHz
USB To Serial
U7
CP2102
DCD
RI
GND
D+
D-
Vdd
REGIN
Vbus
RST
NC
SUSPEND
DTR
DSR
TXD
RXD
RTS
CTS
C5 2.2uF
CHG5v
R15 10K
Q5 s8050
Led1 LED
Led2 LED
Led3 LED
Led4 LED
Led5 LED
R1 100R
R8 100R
R9 100R
R11 100R
R12 100R
R10 10K
R13 10K
R16 10K
KEY2
KEY3
KEY4
MIC5205in
MIC5205-3.3
U3
MIC5205
EN
IN
BYP
OUT
R14 1K
power LED
C9 104
C10 10uF
Battery change Management
S1
C1 10uF
C11 10uF
U6
LTC4054
BAT
PROG
STR
R6 100R
R7 1.65K
Chg LED
Control
S2
S3
VCCX
GNDX
VCCY
GNDY
KEY1
KEY2
Component_1
ADC1_0
ADC1_1
ADC1_2
ADC1_3
C4 1uF
C7 1uF
C12 1uF
C13 1uF
Battery
P1
Header 2
Receiver
P10
Header 4X2
C23 10uF
C24 104
SWD
P4
MHDR1X4
3.7v to 3.3
R4 33K
R5 33K
C6 1uF
Vcc3.7
MircoUSB
USB
D1 1N4148
D2 1N4148
Title
Size
A4
Number
Revision
Date: 2014/12/18
Sheet of
File: D:\crazepony \..\Remote.SchDoc
Drawn By:

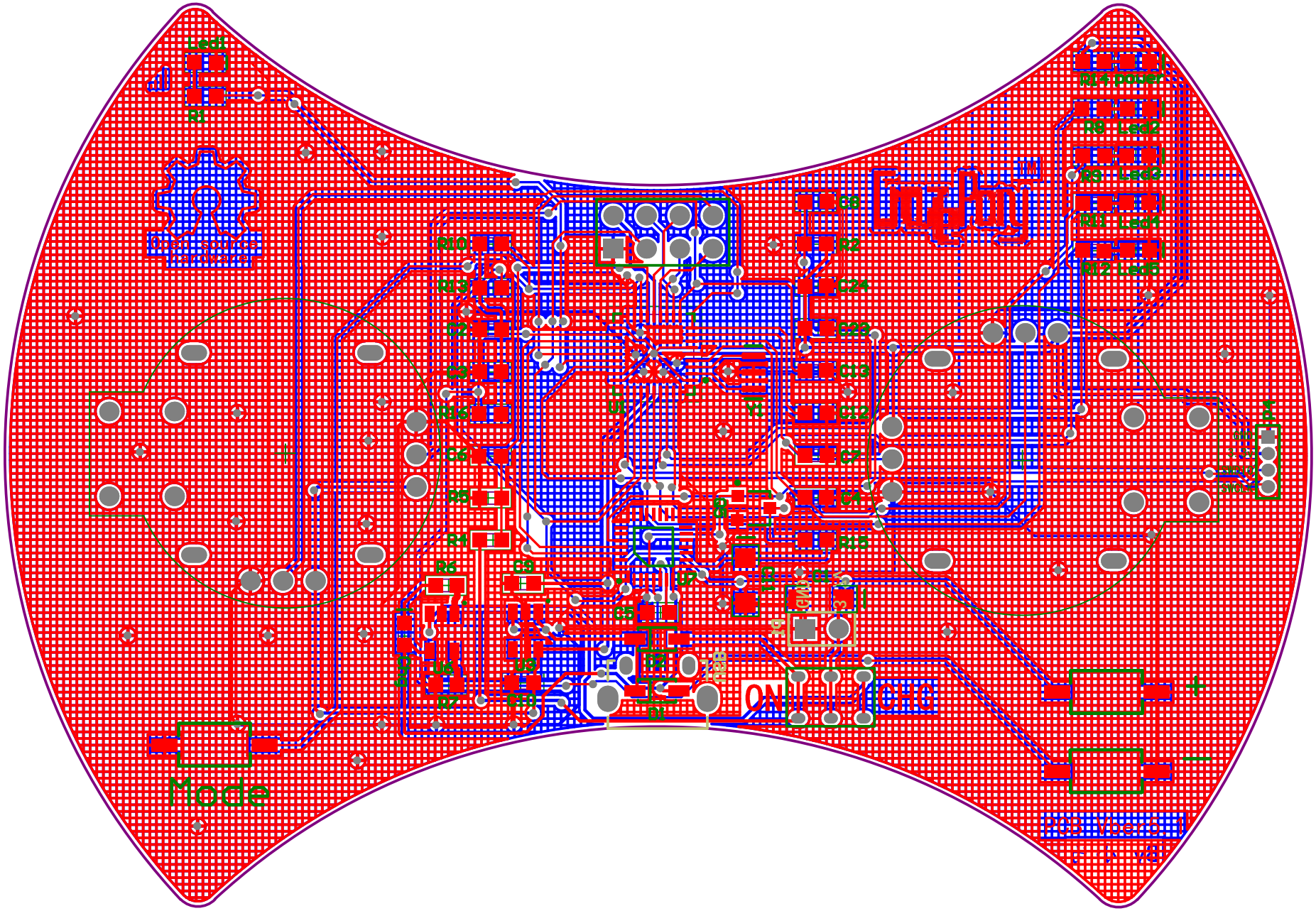
Led1
R1
R14 power
R9 Led2
R3 Led3
R11 Led4
R17 Led5
C6
C2
C24
C23
C13
C12
C7
C4
R15
R10
R13
R2
C8
R12
C3
R5
R4
R6
C9
C5
U4
U3
R7
U1
U2
Y1
R8
D1
Q1
Q2
Q3
R3
D2
ON
CHG
Mode
+
−
PCB Version 1
Copyright