Title		
Size A4	Number	Revision
Date: 2014/12/4		Sheet of
File: D:\PCB2\..\Sheet1.SchDoc		Drawn By:

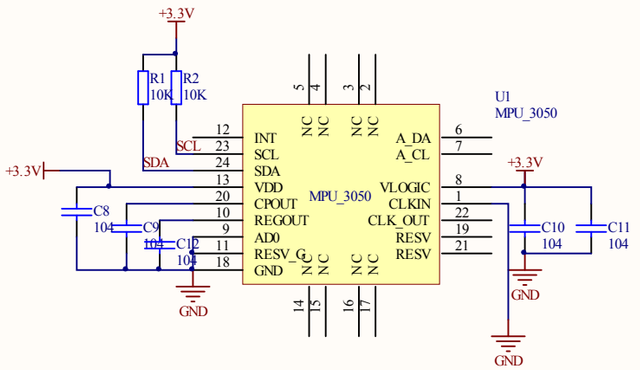

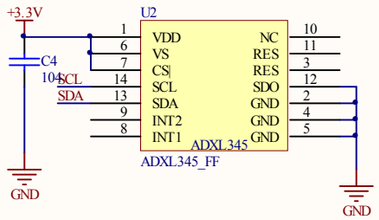

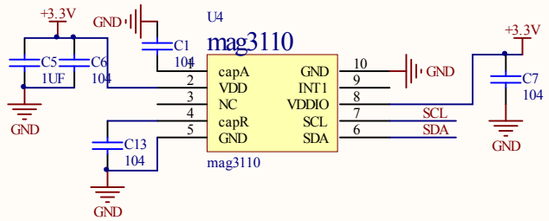

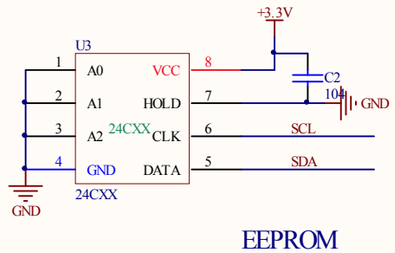

EEPROM

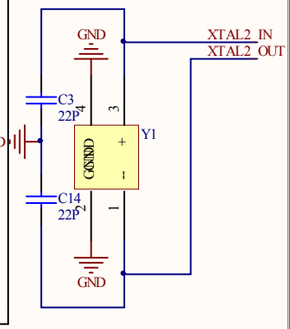

1

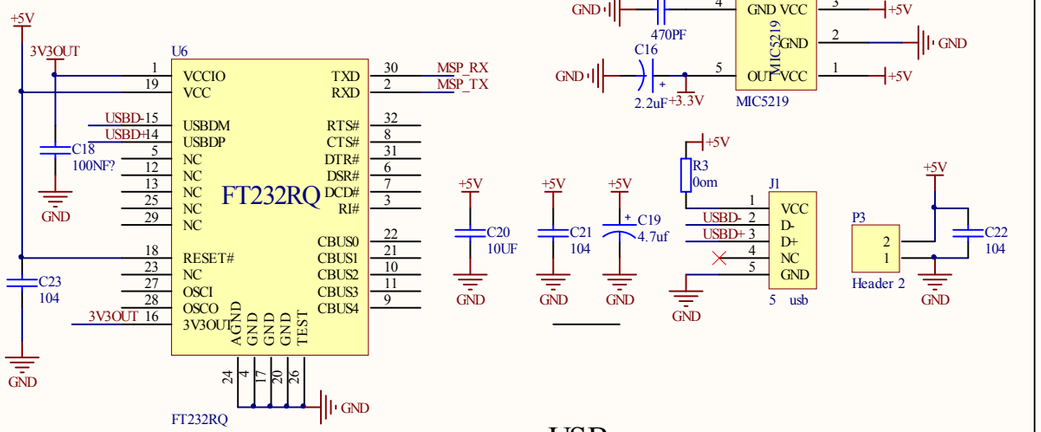

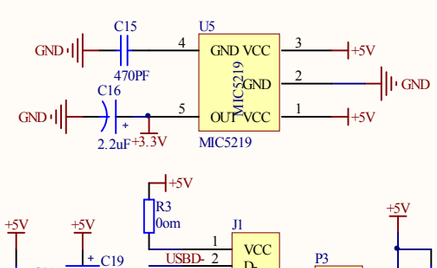

USB

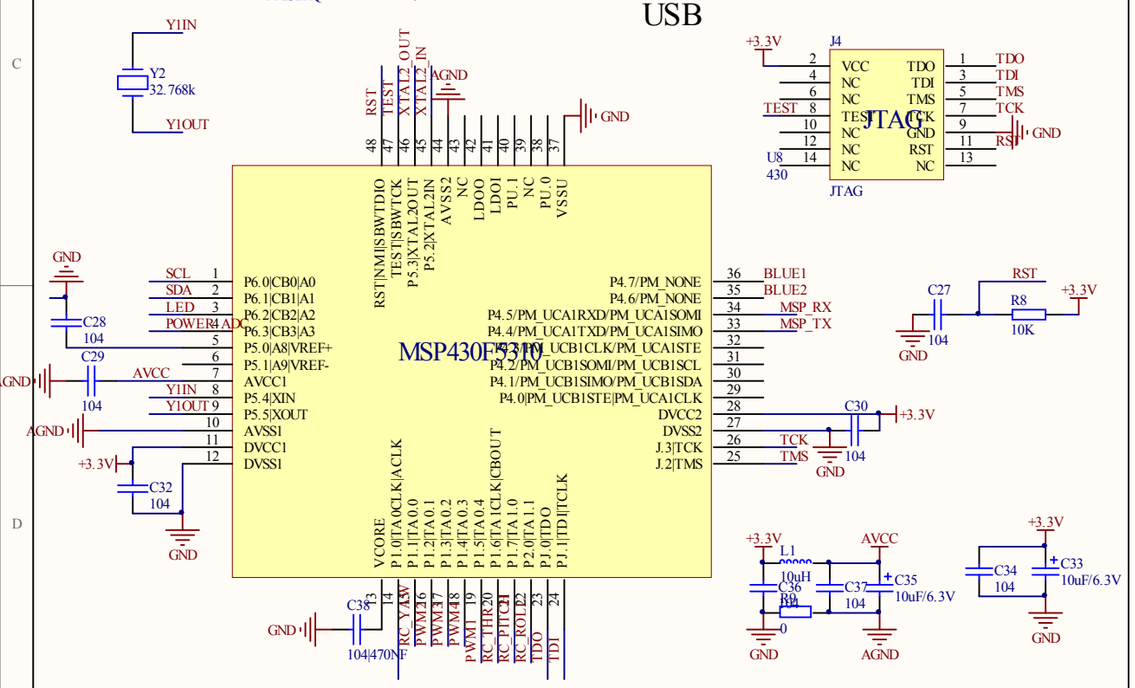

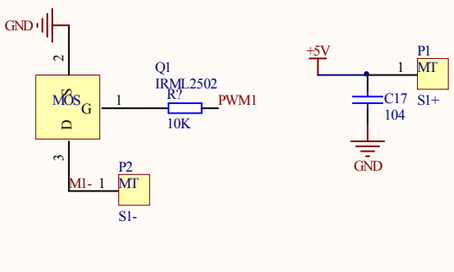

3.3v

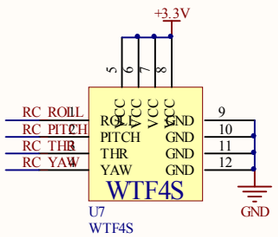

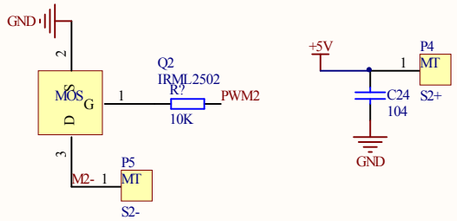

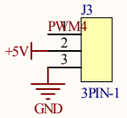

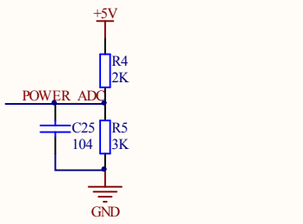

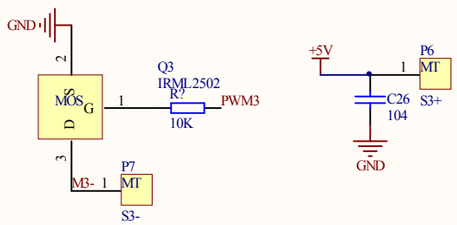

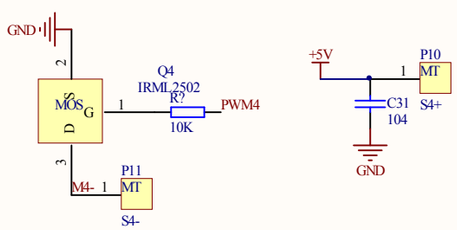

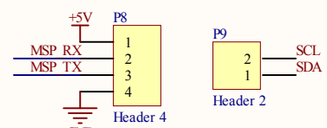

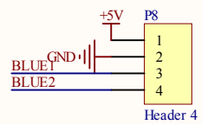

RC,PWM LED

Title		
Size A3	Number	Revision
Date: 2014/12/4		Sheet of
File: D:\PCB2\...\Sheet2_MCKF430.SchDoc		Drawn By:

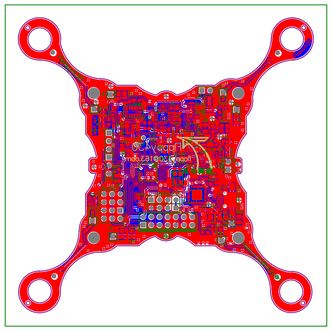

Altium
Making Electronics Design Easier

Altium Limited
13a Rodborough Rd
Frenchs Forest
NSW 2086

ENGINEER:	TITLE:	
PCB DESIGNER:		
DATE: 2014/12/4	PART NO.:	REV:
FILE NAME: MCHT430_100PA60ee	DWG NO:	SCALE:

Comment	Description	Designator	Footprint	LibRef	Quantity
104	Capacitor	C1, C2, C4, C6, C7, C8, C9, C10, C11, C12, C13, C21, C22, C23, C25, C27, C28, C29, C30, C32, C34, C36, C37	0603	CAP	23
22P	Capacitor	C3, C14	0603	CAP	2
1UF	Capacitor	C5	6_0805	CAP	1
470PF	Capacitor	C15	0603	CAP	1
2.2uF	CAPACITOR POL	C16	6_1206(3216)	CAPACITOR POL	1
104	Capacitor	C17, C24, C26,	6_0805	CAP	4
100NF?	Capacitor	C18	0603	CAP	1
4.7uf	CAPACITOR POL	C19	6_1206(3216)	CAPACITOR POL	1
10UF	Capacitor	C20	6_1206(3216)	CAP	1
10uF/6.3V		C33	6_0805	Cap-TAN	1
10uF/6.3V		C35	6_1206(3216)	Cap-TAN	1
104|470NF	Capacitor	C38	0603	CAP	1
LED_1		D1, D2	LED_0603_NEW	LED_R	2
5针usb		J1	micro_USB	USB	1
3PIN-1		J2, J3	header1X3	3PIN-1	2
JTAG		J4	JTAG_msp430	JTAG_430	1
10uH		L1	6_0805	INDUCTOR	1
S1+		P1	SIP01	MOTO1	1
S1-		P2	SIP01	MOTO1	1
Header 2	Header, 2-Pin	P3	header1X2	Header 2	1
S2+		P4	SIP01	MOTO1	1
S2-		P5	SIP01	MOTO1	1
S3+		P6	SIP01	MOTO1	1
S3-		P7	SIP01	MOTO1	1
Header 4	Header, 4-Pin	P8	HDR1X4	Header 4	1
Header 2	Header, 2-Pin	P9	HDR1X2	Header 2	1
S4+		P10	SIP01	MOTO1	1
S4-		P11	SIP01	MOTO1	1
IRML2502		Q1, Q2, Q3, Q4	IRLML2502	IRML2502	4
10K		R1, R2, R8, R?	0603	RES	7
0om		R3	0603	RES	1
2K		R4	0603	RES	1
3K		R5	0603	RES	1
1K		R6, R7	0603	RES	2
0	Resistor	R9	0603	Res	1
MPU_3050		U1	MPU_3050\ITG3200	MPU_3050	1
ADXL345_FF		U2	ADXL345	ADXL345_FF	1
24CXX		U3	24C02	24CXX	1
mag3110		U4	mag3110 - short	mag3110	1
MIC5219		U5	MIC5219	MIC5219	1
FT232RQ		U6	QFN32	FT232RQ	1
WTF4S		U7	WTF4S_ 接收	WTF4S	1
430		U8	TQFP_48	MSP430F5310	1
四脚晶振		Y1	四脚晶振 - 小	四脚晶振	1
32.768k	Crystal	Y2	32kJINZHEN	CRYSTAL	1