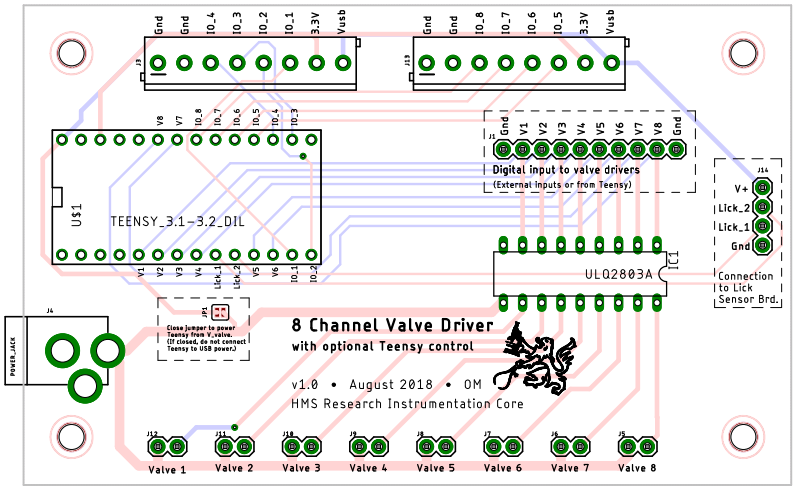
Gnd
Gnd
IO_4
IO_3
IO_2
IO_1
3.3V
Vusb
J3
Gnd
Gnd
IO_8
IO_7
IO_6
IO_5
3.3V
Vusb
J13
V8
V7
IO_8
IO_7
IO_6
IO_5
IO_4
IO_3
U$1
TEENSY_3.1-3.2_DIL
V1
V2
V3
V4
Lick_1
Lick_2
V5
V6
IO_1
IO_2
J1
Gnd
V1
V2
V3
V4
V5
V6
V7
V8
Gnd
Digital input to valve drivers
(External inputs or from Teensy)
J14
V+
Lick_2
Lick_1
Gnd
Connection
to Lick
Sensor Brd.
IC1
ULQ2803A
J4
POWER_JACK
J6
Close jumper to power
Teensy from V_valve.
(If closed, do not connect
Teensy to USB power)
8 Channel Valve Driver
with optional Teensy control
v1.0 • August 2018 • OM
HMS Research Instrumentation Core
J12
J11
J10
J9
J8
J7
J6
J5
Valve 1
Valve 2
Valve 3
Valve 4
Valve 5
Valve 6
Valve 7
Valve 8

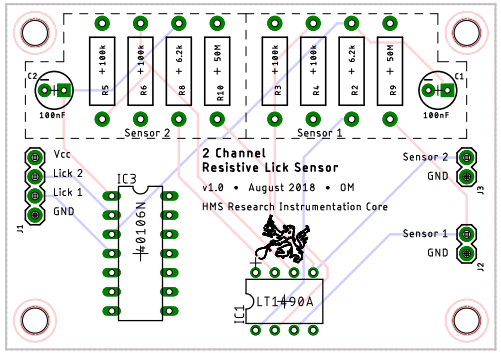
C2
100nF
R5 100k
R6 100k
R8 6.2k
R10 50M
R3 100k
R4 100k
R2 6.2k
R9 50M
C1
100nF
Sensor 2
Sensor 1
Vcc
Lick 2
Lick 1
GND
J1
IC3
4016N
2 Channel
Resistive Lick Sensor
v1.0 • August 2018 • OM
HMS Research Instrumentation Core
Sensor 2
GND
J3
Sensor 1
GND
J2
IC2
LT1490A