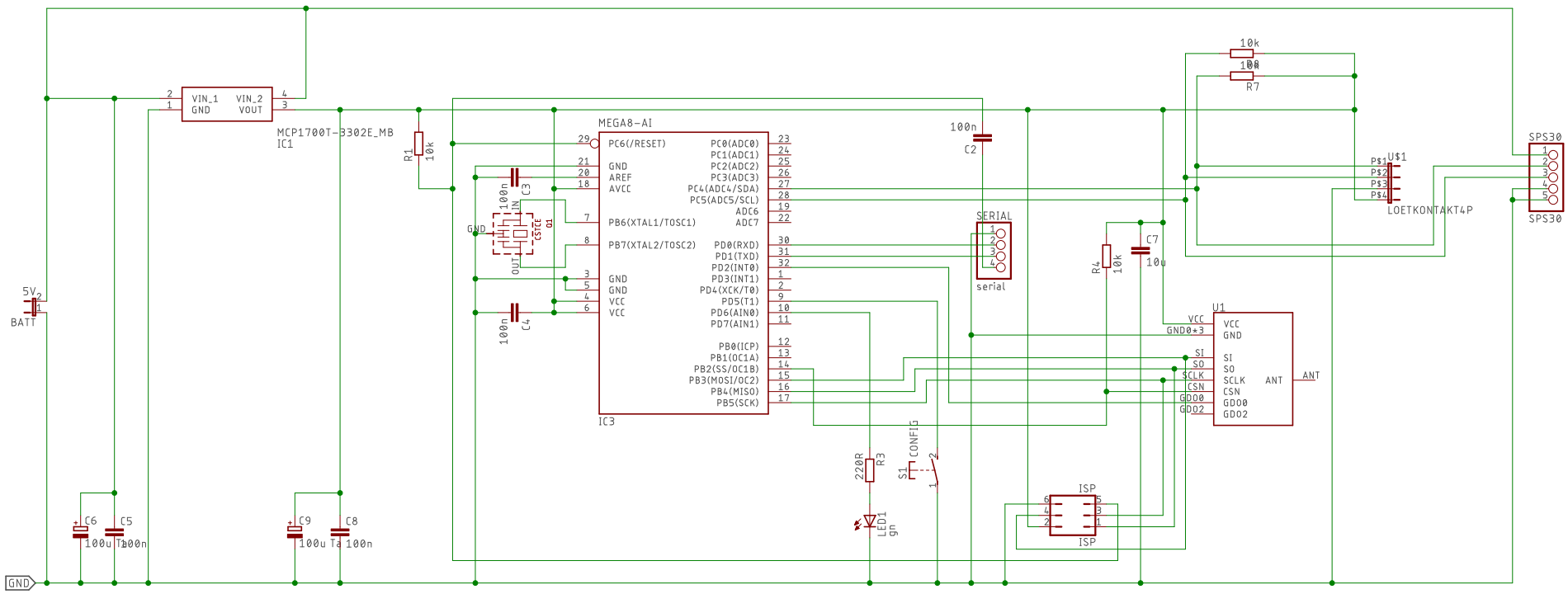

(c) Stephan * CC by-nc-sa

TITLE: HB-UNI-Sen-PM_v2	
Document Number:	REV: 2.0
Date: 15.01.2022 18:26	Sheet: 1/1