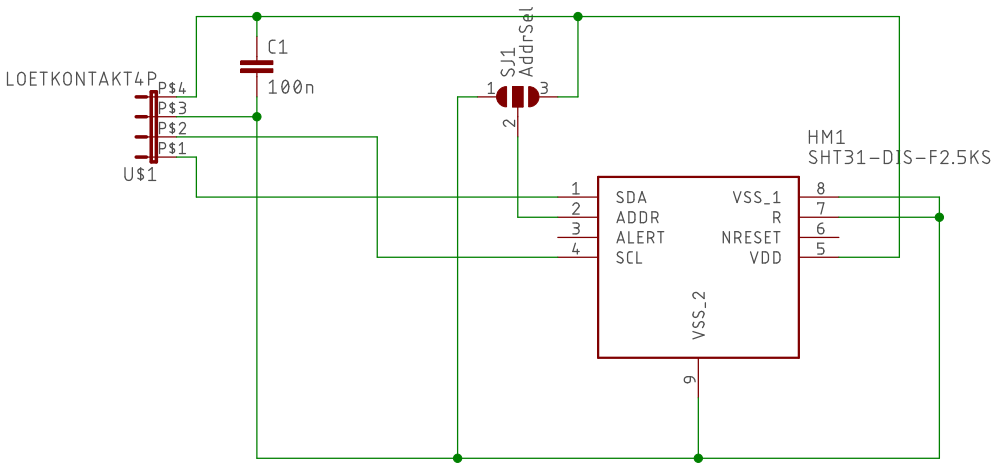

(c) Stephan * CC by-nc-sa

TITLE: HB-UNI-Sen-PM_SHT31_Board_v2

Document Number:

REV: 2.0

Date: 15.01.2022 18:26

Sheet: 1/1