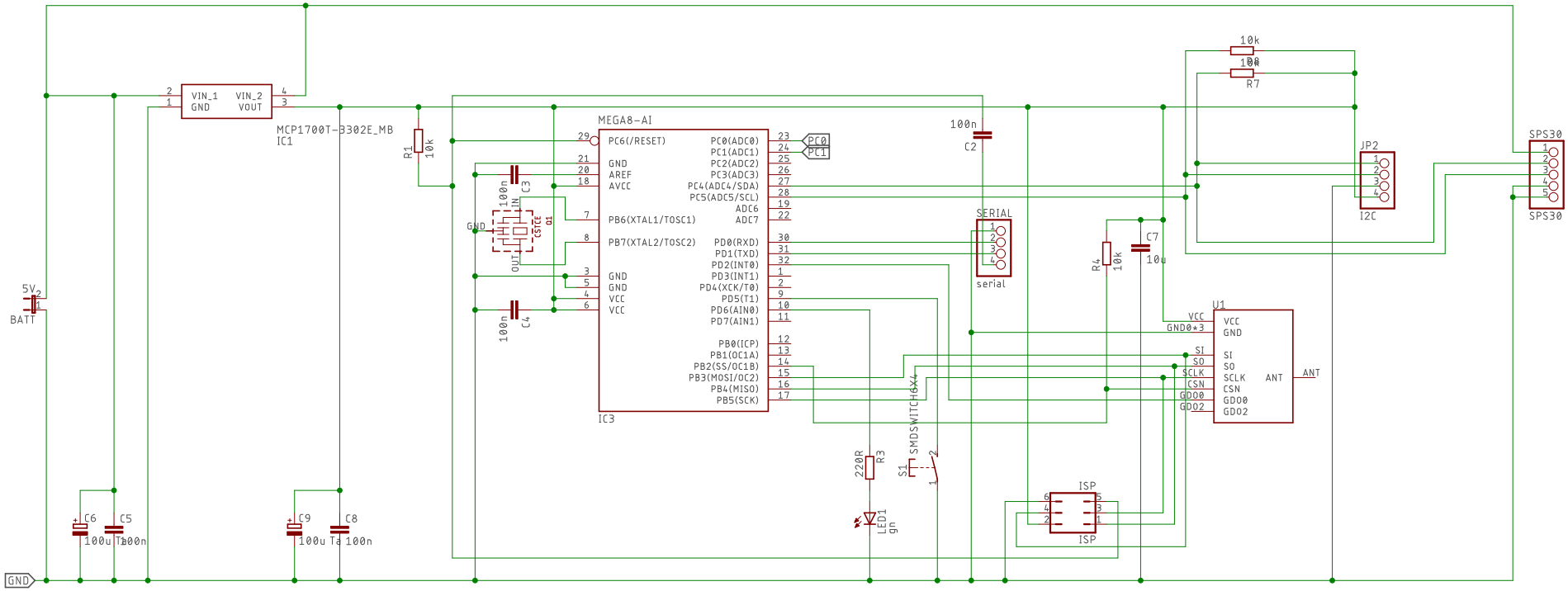

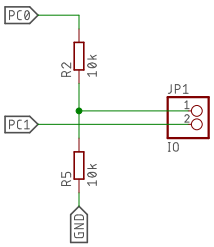

(c) Stephan * CC by-nc-sa

TITLE: HB-UNI-Sen-PM_v1

Document Number:

REV: 1.0

Date: 22.06.2021 18:37

Sheet: 1/1