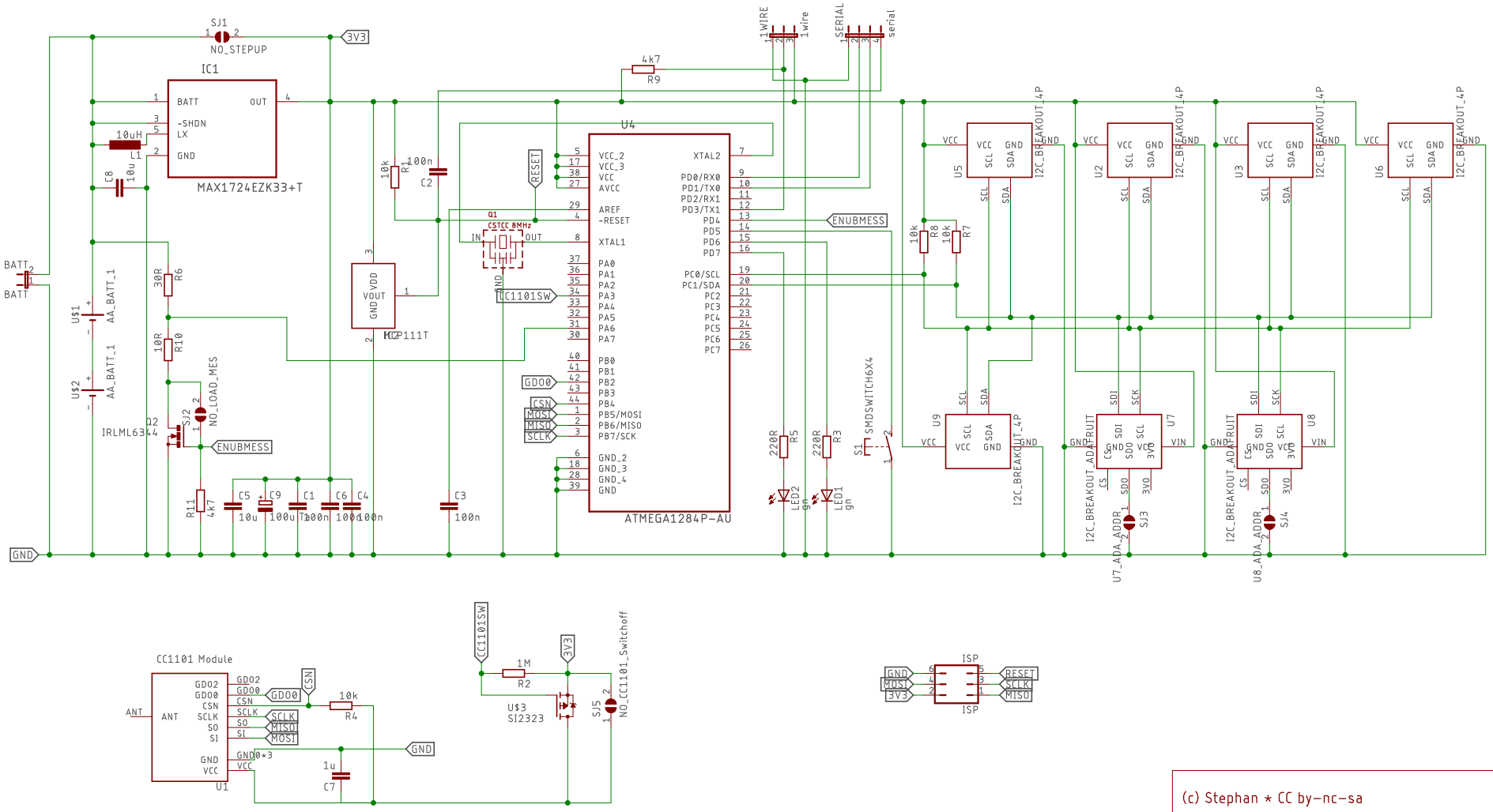

(c) Stephan * CC by-nc-sa

TITLE: AskSinpp_1284Board_v1p3

Document Number:

REV: 1.3

Date: 22.06.2020 23:31

Sheet: 1/1