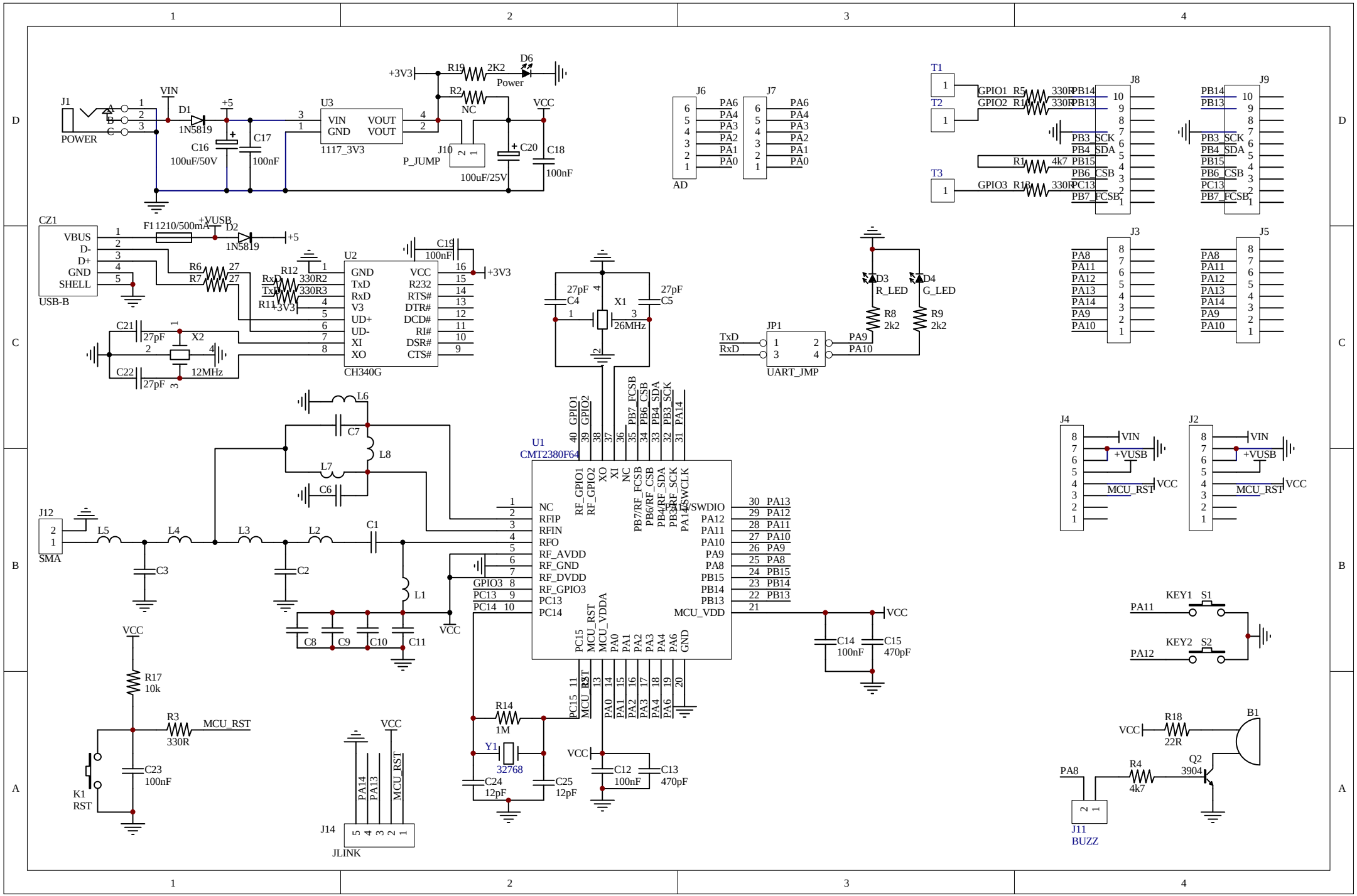
J1
POWER
VIN
D1
1N5819
+5
C16
100uF/50V
C17
100nF
U3
VIN
GND
VOUT
VOUT
1117_3V3
+3V3
R19
2K2
D6
Power
R2
NC
VCC
J10
P_JUMP
C20
100uF/25V
C18
100nF
J6
AD
J7
PA6
PA4
PA3
PA2
PA1
PA0
T1
T2
T3
GPIO1
GPIO2
GPIO3
R5
R1
R13
330R
4k7
J8
J9
PB14
PB13
PB3_SCK
PB4_SDA
PB15
PB6_CSB
PC13
PB7_FCSB
CZ1
VBUS
D-
D+
GND
SHELL
USB-B
F1 1210/500mA
+VUSB
D2
1N5819
R6
R7
27
R12
R11
330R2
330R3
RxD
TxD
U2
GND
TxD
RxD
V3
UD+
UD-
XI
XO
VCC
R232
RTS#
DTR#
DCD#
RI#
DSR#
CTS#
CH340G
C19
100nF
C21
27pF
X2
12MHz
C22
27pF
27pF
C4
X1
26MHz
27pF
C5
D3
R_LED
D4
G_LED
R8
2k2
R9
2k2
JP1
UART_JMP
J3
J5
PA8
PA11
PA12
PA13
PA14
PA9
PA10
L6
C7
L8
L7
C6
U1
CMT2380F64
NC
RFIP
RFIN
RFO
RF_AVDD
RF_GND
RF_DVDD
RF_GPIO3
PC13
PC14
GPIO3
SWDIO
PA12
PA11
PA10
PA9
PA8
PB15
PB14
PB13
MCU_VDD
RF_GPIO1
RF_GPIO2
XO
XI
NC
PB7/RF_FCSB
PB6/RF_CSB
PB4/RF_SDA
PB3/RF_SCK
PA14/SWCLK
PC15
MCU_RST
MCU_VDDA
PA0
PA1
PA2
PA3
PA4
PA6
GND
J12
SMA
L5
L4
L3
L2
C1
C3
C2
L1
C8
C9
C10
C11
VCC
C14
100nF
C15
470pF
J4
J2
VIN
+VUSB
MCU_RST
VCC
KEY1
S1
KEY2
S2
PA11
PA12
R17
10k
R3
330R
MCU_RST
C23
100nF
K1
RST
R14
1M
Y1
32768
C24
12pF
C25
12pF
C12
100nF
C13
470pF
J14
JLINK
PA14
PA13
MCU_RST
R18
22R
B1
Q2
3904
R4
4k7
PA8
J11
BUZZ