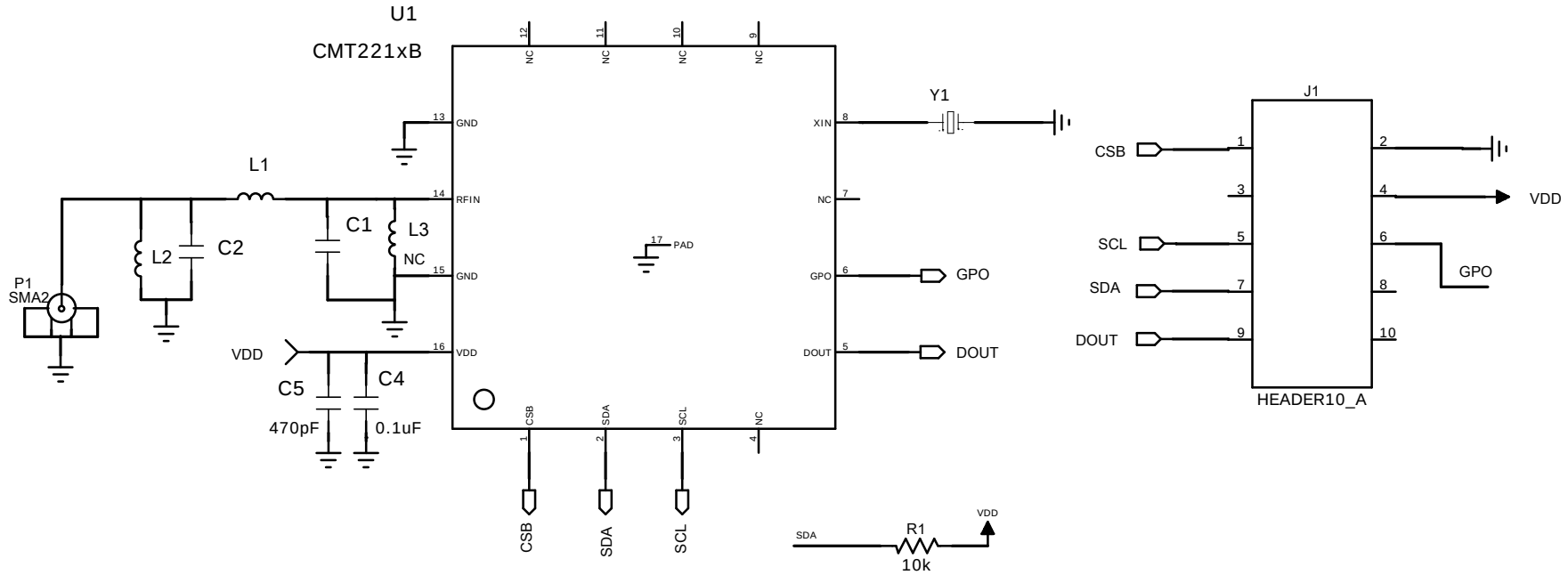

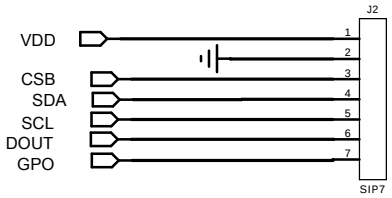

Designator	Value			
	315MHZ	433.92MHZ	868.35MHZ	915MHZ
L2	62nH	36nH	8.2nH	8.2nH
L1	68nH	36nH	12nH	10nH
C1	3pF	3pF	NC	NC
C2	12pF	10pF	7.5pF	7.5pF
Y1	26.2736MHz	27.138MHz	27.1451MHz	28.6034MHz

CMOSTEK MICROELECTRONICS CO., LTD.
TEL: 0755 8323 1083
FAX: 0755 8276 1326

TITLE CMT2210B-EM RX-MODULE-433MHZ

DATE	SIZE	SHEET	OF	REV
2017-2-23	B	1	1	V1.0