Designator	Value			
	315MHZ	433MHZ	868MHZ	915MHZ
L1	180H	180nH	100nH	100nH
L2	51nH	36nH	5.6nH	5.1nH
L3	27nH	18nH	6.8nH	6.8nH
L4	27nH	330pF	220pF	220pF
C1	68pF	68pF	68pF	68pF
C2	18pF	15pF	10pF	9.1pF
C3	27pF	15pF	6.8pF	6.2pF
C4	9pF	NC	NC	NC

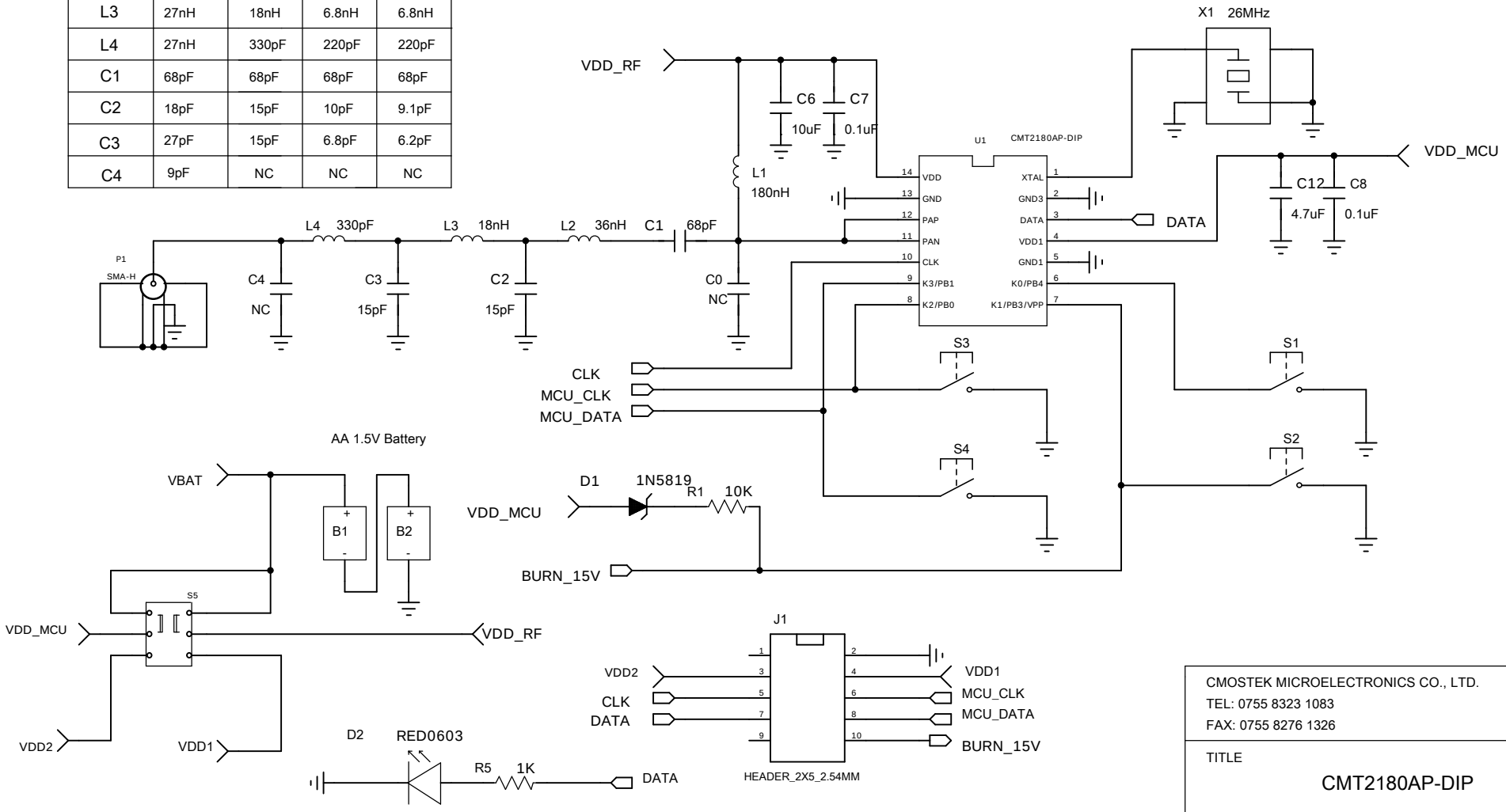

CMOSTEK MICROELECTRONICS CO., LTD.
TEL: 0755 8323 1083
FAX: 0755 8276 1326

TITLE
CMT2180AP-DIP

DATE	SIZE	SHEET	REV
20160802	B	1 OF 1	V1.1