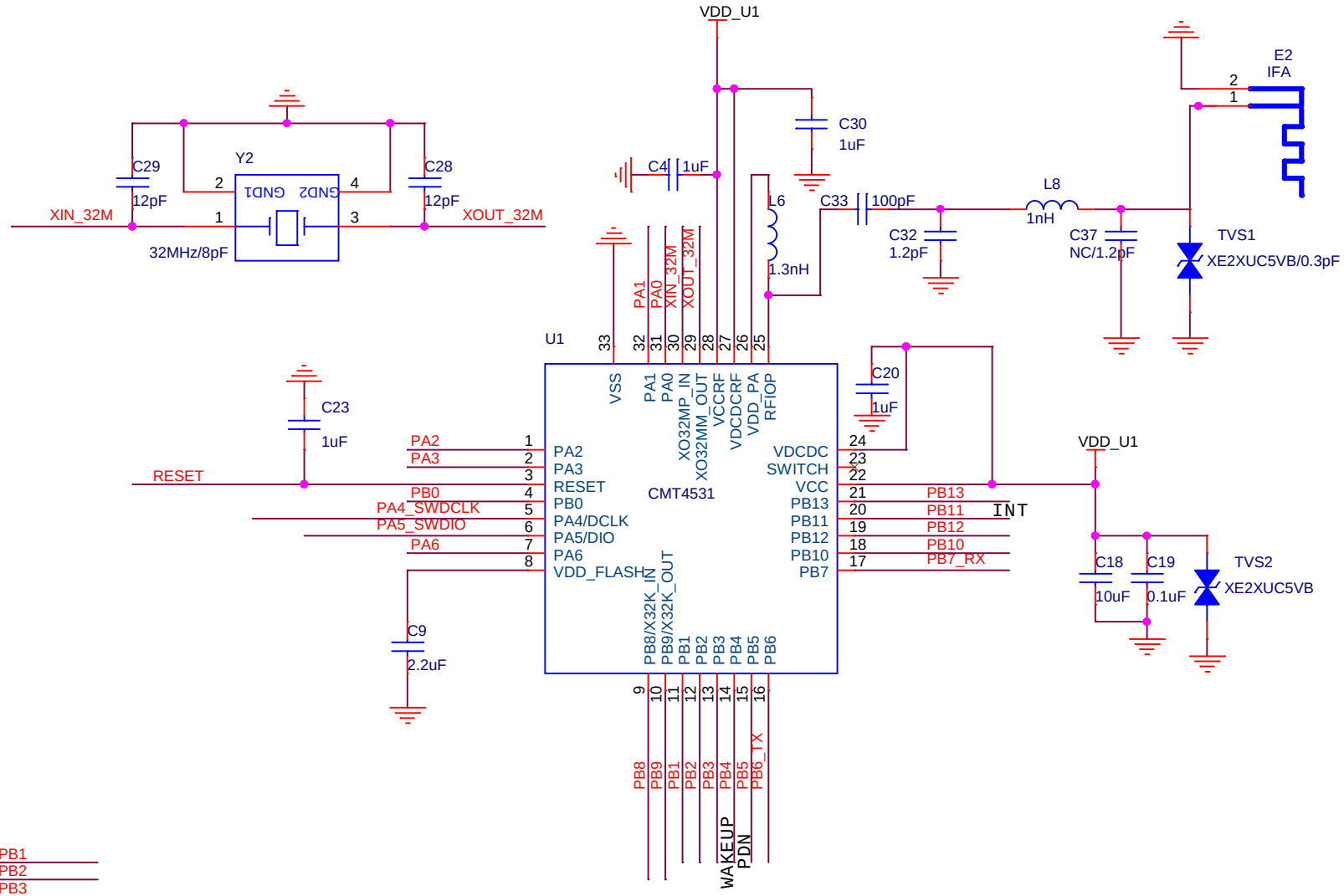

HOPERF

Title	CMT4531 Bluetooth Low Energy (BLE) System
Size A	Document Number HM-BT4531
Rev V1.0	
Date: Monday, July 31, 2023	Sheet 1 of 1