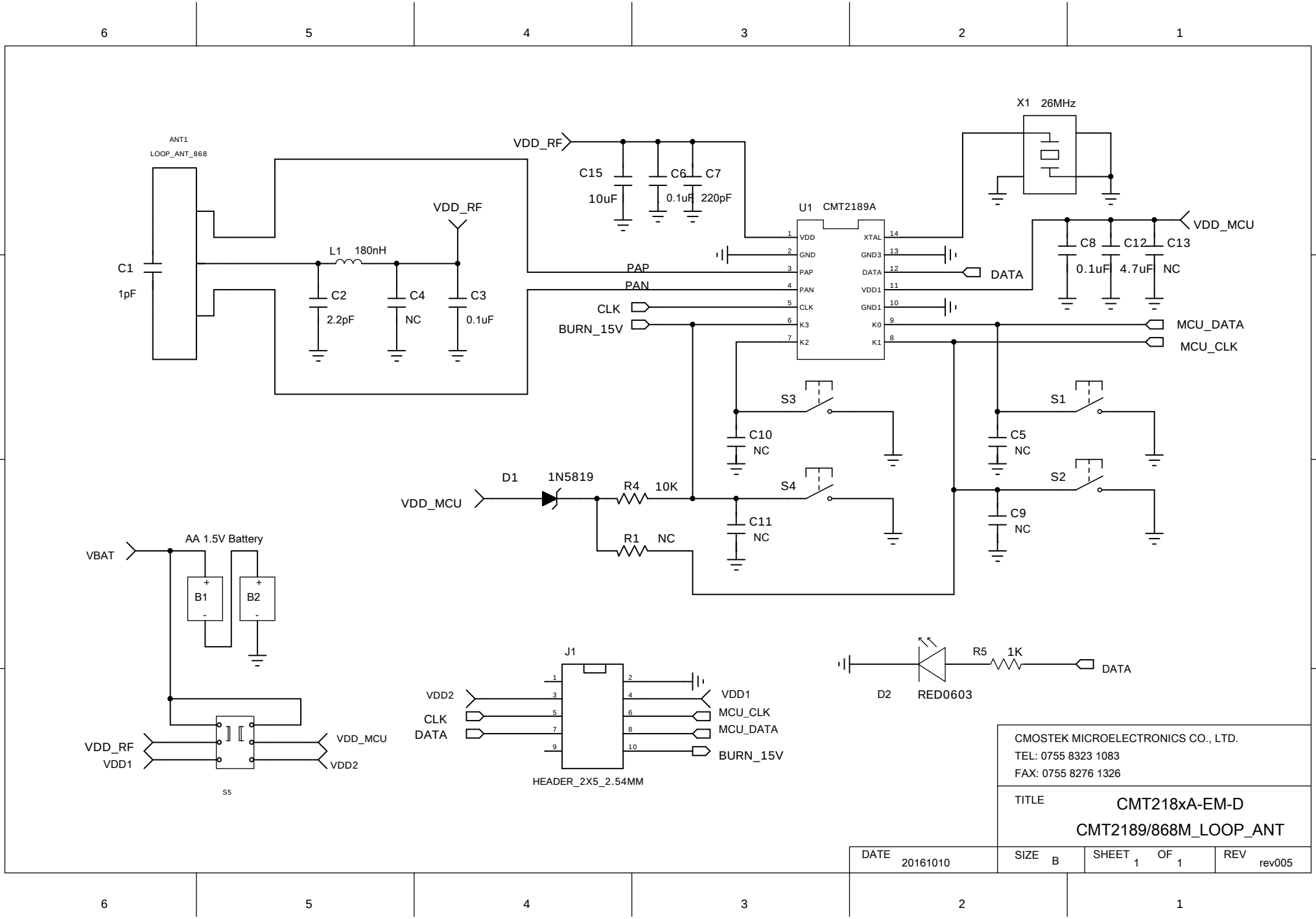

CMOSTEK MICROELECTRONICS CO., LTD.
TEL: 0755 8323 1083
FAX: 0755 8276 1326

TITLE CMT218xA-EM-D
CMT2189/868M_LOOP_ANT

DATE	SIZE	SHEET	OF	REV
20161010	B	1	1	rev005