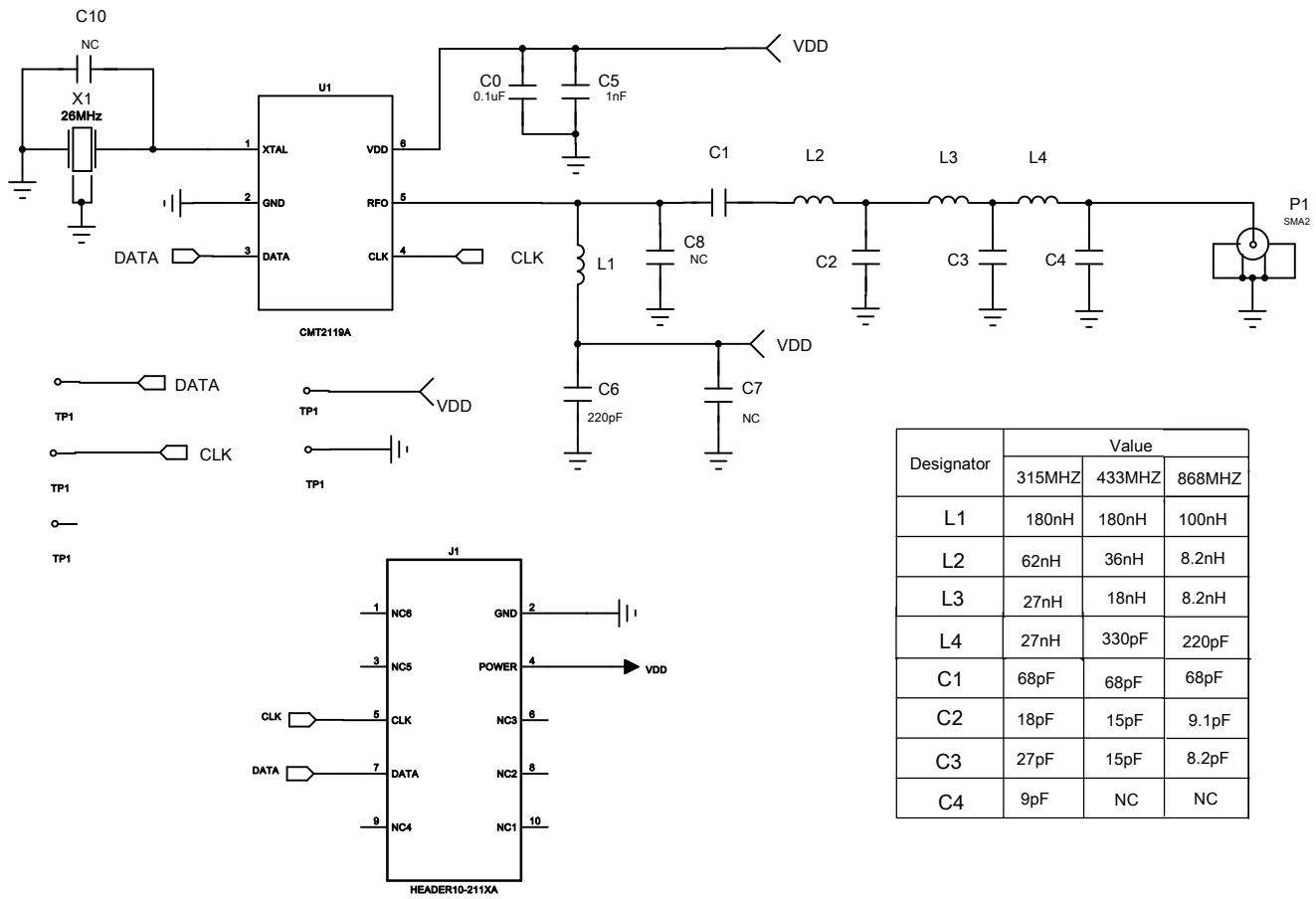

Designator	Value		
	315MHZ	433MHZ	868MHZ
L1	180nH	180nH	100nH
L2	62nH	36nH	8.2nH
L3	27nH	18nH	8.2nH
L4	27nH	330pF	220pF
C1	68pF	68pF	68pF
C2	18pF	15pF	9.1pF
C3	27pF	15pF	8.2pF
C4	9pF	NC	NC

CMOSTEK MICROELECTRONICS CO., LTD.
TEL: 0755 8323 1083
FAX: 0755 8276 1326

TITLE CMT211xA-EM TX-MODULE

DATE	SIZE	SHEET	OF	REV
2014-8-18	B	1	1	V1.0