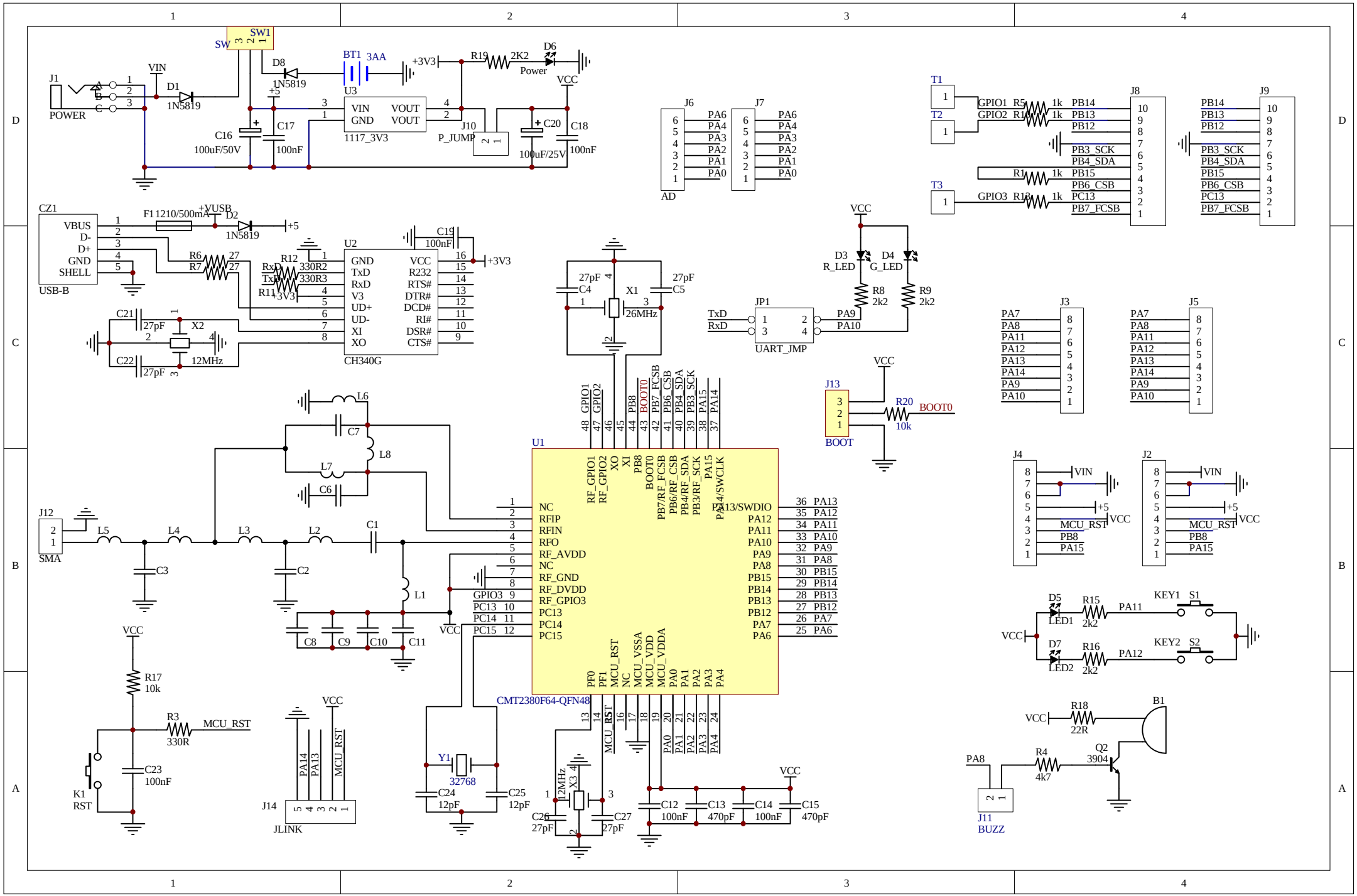
SW1
J1
POWER
VIN
D1
1N5819
D8
1N5819
BT1
3AA
U3
VIN
GND
VOUT
VOUT
1117_3V3
C16
100uF/50V
C17
100nF
+3V3
R19
2K2
D6
Power
VCC
J10
P_JUMP
C20
100uF/25V
C18
100nF
J6
AD
J7
T1
T2
T3
GPIO1 R5 1k
GPIO2 R14 1k
GPIO3 R13 1k
R1 1k
J8
J9
CZ1
VBUS
D-
D+
GND
SHELL
USB-B
F1 1210/500mA
+VUSB
D2
1N5819
R6 27
R7 27
R12 330R2
R11 330R3
U2
CH340G
GND
TxD
RxD
V3
UD+
UD-
XI
XO
VCC
R232
RTS#
DTR#
DCD#
RI#
DSR#
CTS#
C19
100nF
C21 27pF
C22 27pF
X2
12MHz
C4 27pF
C5 27pF
X1
26MHz
D3 R_LED
D4 G_LED
R8 2k2
R9 2k2
JP1
UART_JMP
J13
BOOT
R20 10k
BOOT0
J3
J5
J4
J2
MCU_RST
PB8
PA15
L6
C7
L8
L7
C6
U1
CMT2380F64-QFN48
NC
RFIP
RFIN
RFO
RF_AVDD
RF_GND
RF_DVDD
RF_GPIO3
PC13
PC14
PC15
PA13/SWDIO
PA12
PA11
PA10
PA9
PA8
PB15
PB14
PB13
PB12
PA7
PA6
J12
SMA
L5
L4
L3
L2
C1
C3
C2
L1
C8
C9
C10
C11
R17 10k
R3 330R
K1
RST
C23 100nF
J14
JLINK
PA14
PA13
Y1
32768
C24 12pF
C25 12pF
X3
12MHz
C26 27pF
C27 27pF
C12 100nF
C13 470pF
C14 100nF
C15 470pF
D5
LED1
R15 2k2
KEY1
S1
D7
LED2
R16 2k2
KEY2
S2
R18 22R
B1
Q2 3904
R4 4k7
J11
BUZZ