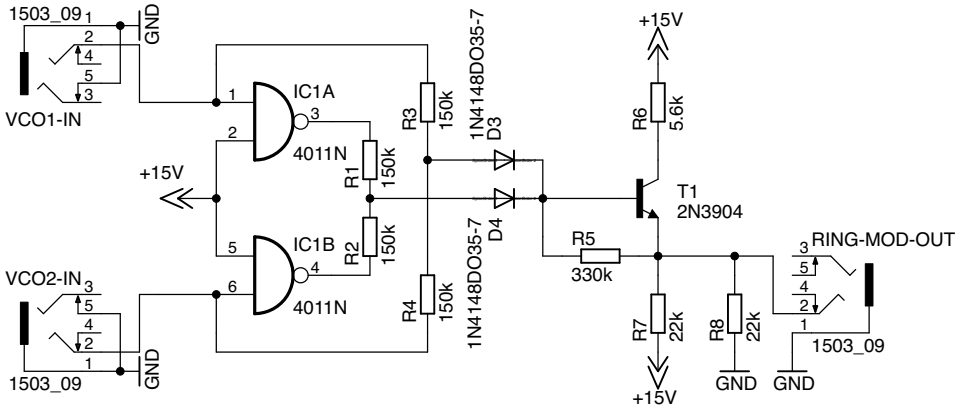

please double check the pinout of your audio jacks as pin 2 and 3 might be changed depending on the manufacturer

Unused Gates

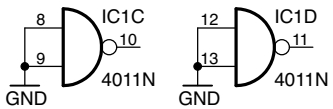

Power

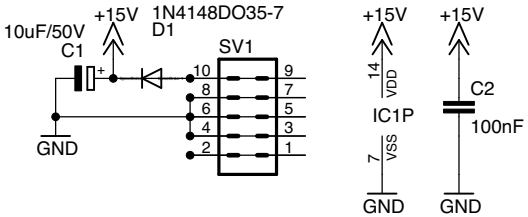

ARP Odyssey Ring Modulator
can be used to modulate the signal from two ARP Odyssey VCOs
Copyright exists (Rhodes/CBS/ARP).
No infringement is intended.
Only for experimental and educational purposes.

TITLE: ARP Odyssey Ring Mod 1.1 by PhilicityK	
Document Number:	REV:
Date: 02.01.17 01:19	Sheet: 1/1