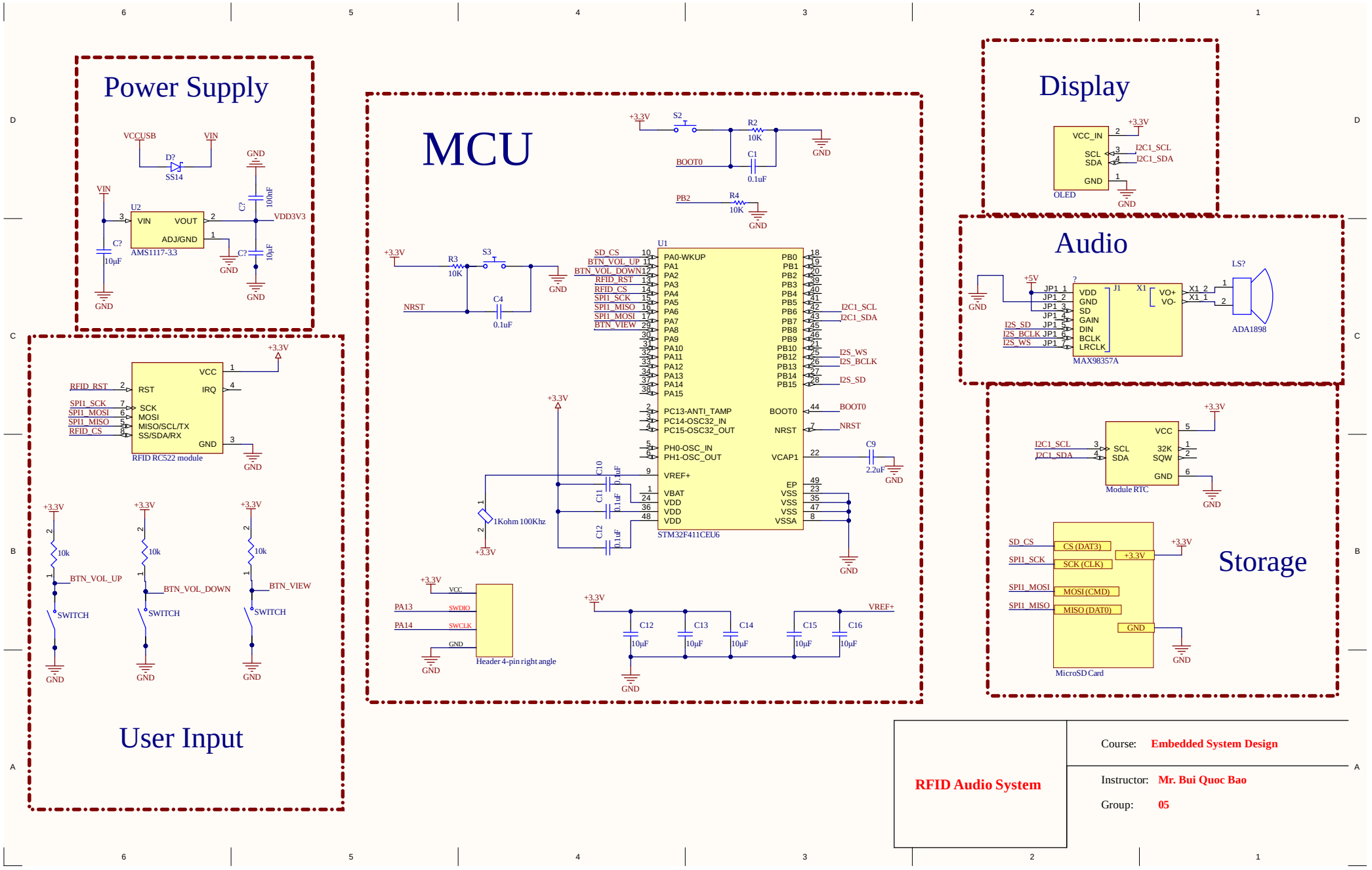
Power Supply
VCCUSB
VIN
D?
SS14
GND
VIN
U2
VIN
VOUT
ADJ/GND
AMS1117-33
C?
10µF
C?
100nF
C?
10µF
VDD3V3
MCU
+3.3V
S2
R2
10K
BOOT0
C1
0.1uF
PB2
R4
10K
R3
10K
S3
NRST
C4
0.1uF
U1
SD_CS
BTN_VOL_UP
BTN_VOL_DOWN
RFID_RST
RFID_CS
SPI1_SCK
SPI1_MISO
SPI1_MOSI
BTN_VIEW
I2C1_SCL
I2C1_SDA
I2S_WS
I2S_BCLK
I2S_SD
PA0-WKUP
PA1
PA2
PA3
PA4
PA5
PA6
PA7
PA8
PA9
PA10
PA11
PA12
PA13
PA14
PA15
PC13-ANTI_TAMP
PC14-OSC32_IN
PC15-OSC32_OUT
PH0-OSC_IN
PH1-OSC_OUT
VREF+
VBAT
VDD
VDD
VDD
PB0
PB1
PB2
PB3
PB4
PB5
PB6
PB7
PB8
PB9
PB10
PB12
PB13
PB14
PB15
BOOT0
NRST
VCAP1
EP
VSS
VSS
VSS
VSSA
STM32F411CEU6
C9
2.2uF
C10
C11
C12
0.1uF
1Kohm 100Khz
PA13
PA14
SWDIO
SWCLK
Header 4-pin right angle
C12
C13
C14
C15
C16
10µF
VREF+
Display
VCC_IN
SCL
SDA
OLED
Audio
+5V
JP1
VDD
GND
SD
GAIN
DIN
BCLK
LRCLK
MAX98357A
J1
X1
VO+
VO-
LS?
ADA1898
User Input
RFID_RST
SPI1_SCK
SPI1_MOSI
SPI1_MISO
RFID_CS
RST
SCK
MOSI
MISO/SCL/TX
SS/SDA/RX
VCC
IRQ
GND
RFID RC522 module
10k
BTN_VOL_UP
BTN_VOL_DOWN
BTN_VIEW
SWITCH
Storage
SCL
SDA
32K
SQW
Module RTC
SD_CS
SPI1_SCK
SPI1_MOSI
SPI1_MISO
CS (DAT3)
SCK (CLK)
MOSI (CMD)
MISO (DAT0)
MicroSD Card
RFID Audio System
Course: Embedded System Design
Instructor: Mr. Bui Quoc Bao
Group: 05