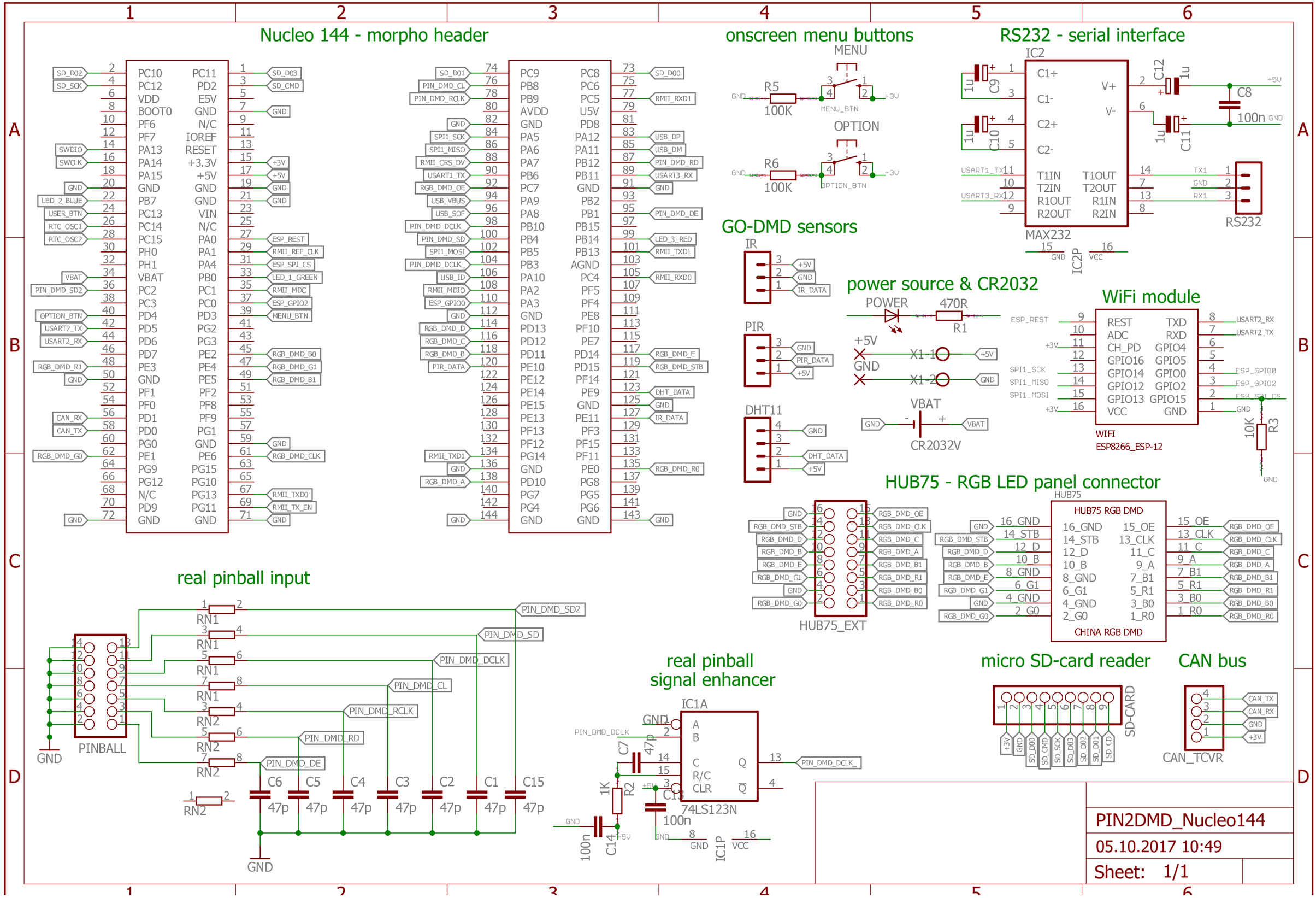
Nucleo 144 - morpho header
onscreen menu buttons
RS232 - serial interface
GO-DMD sensors
power source & CR2032
WiFi module
HUB75 - RGB LED panel connector
real pinball input
real pinball signal enhancer
micro SD-card reader
CAN bus
PIN2DMD_Nucleo144
05.10.2017 10:49
Sheet: 1/1