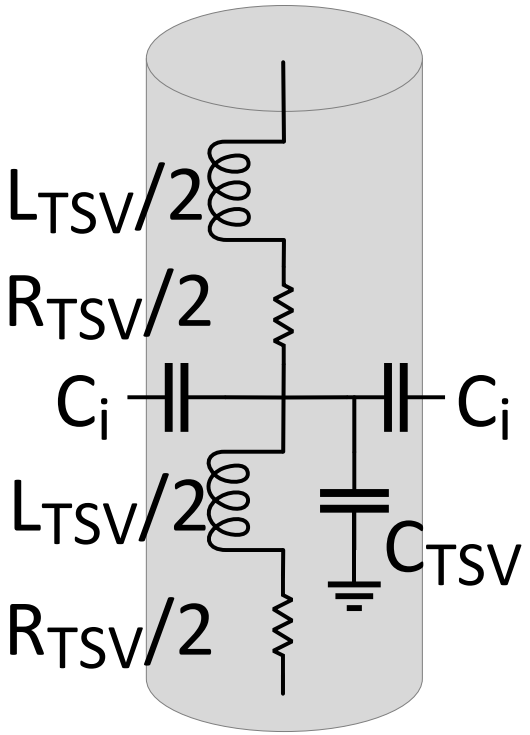

(a)

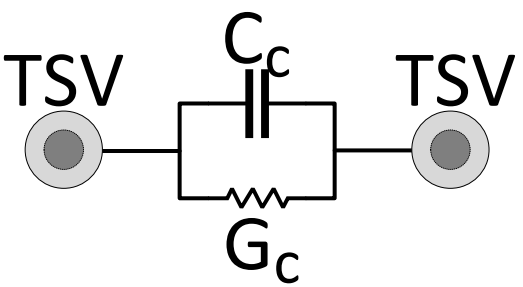

(b)

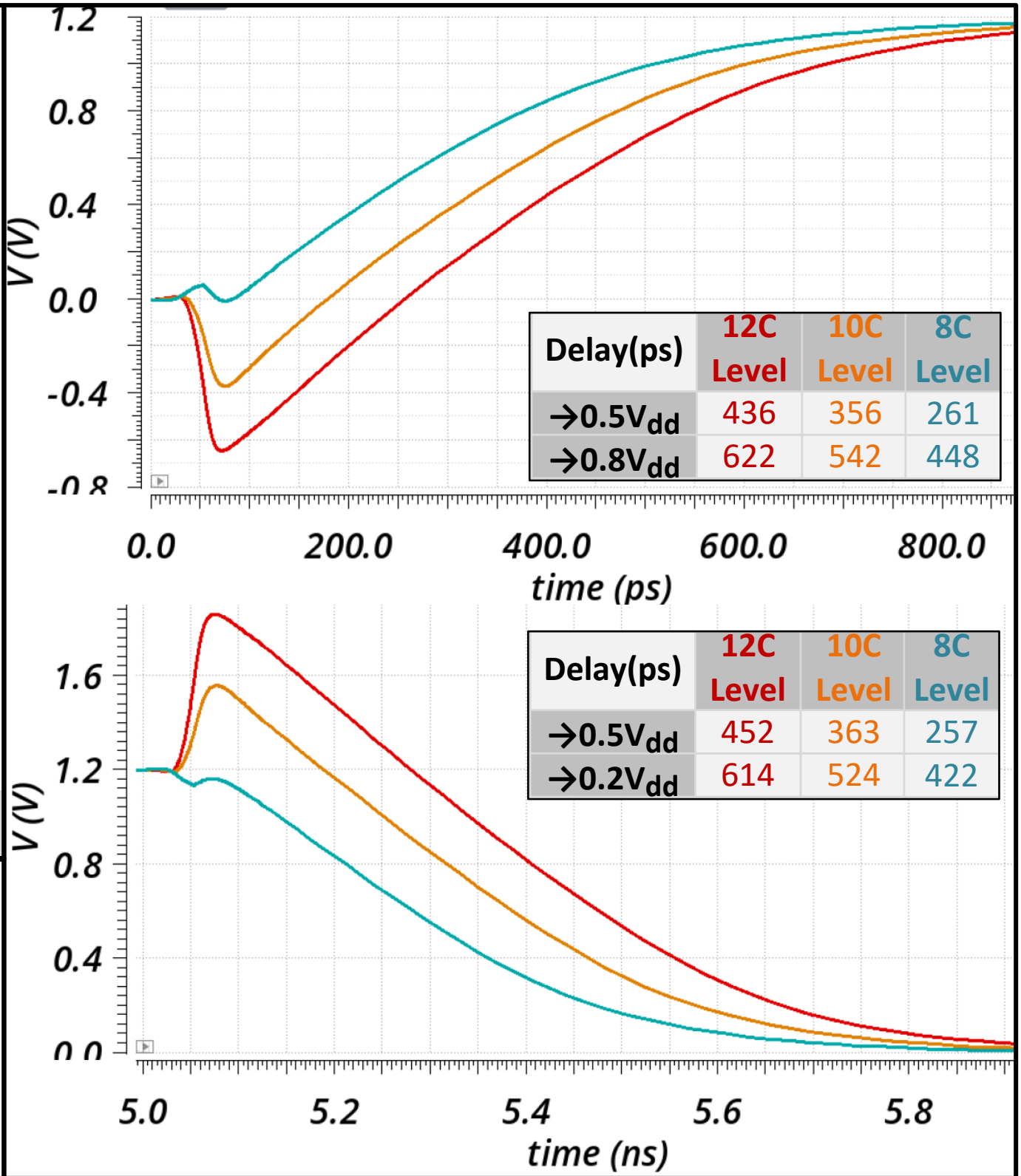

Delay(ps)	12C Level	10C Level	8C Level
→0.5V_{dd}	436	356	261
→0.8V_{dd}	622	542	448

Delay(ps)	12C Level	10C Level	8C Level
→0.5V_{dd}	452	363	257
→0.2V_{dd}	614	524	422

(c)