Cann

MCU

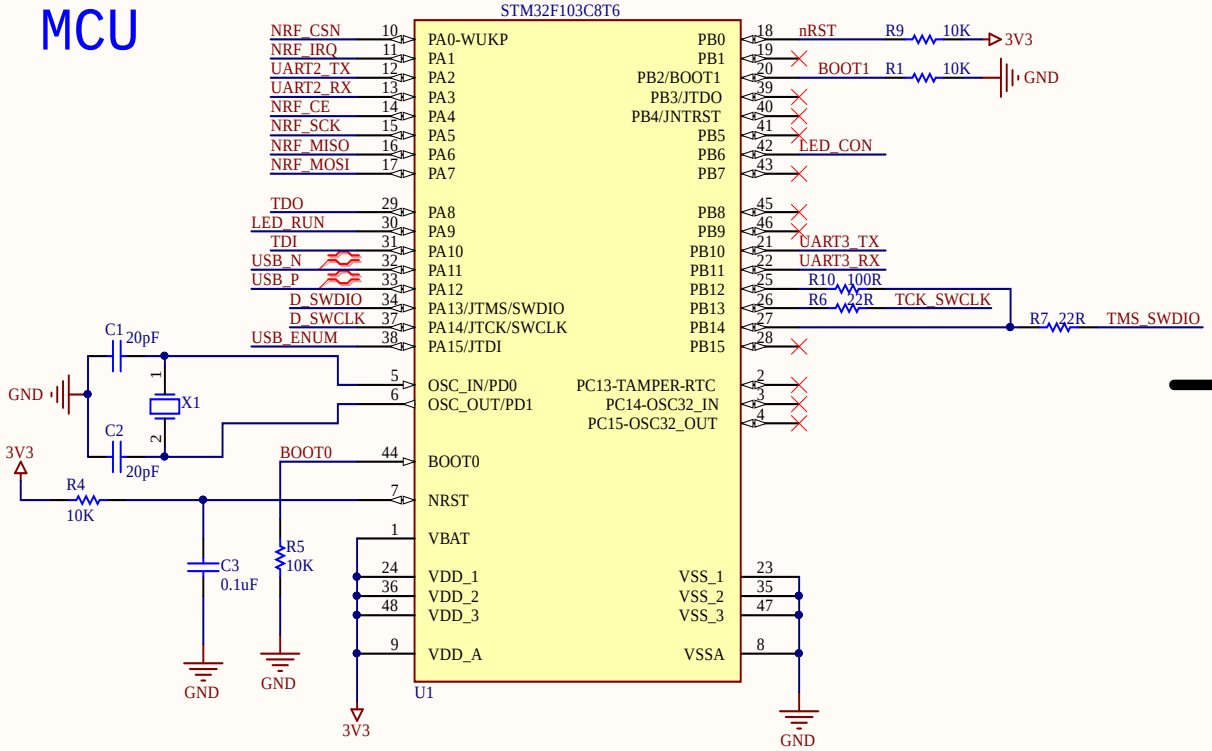

SWD

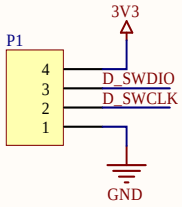

LED

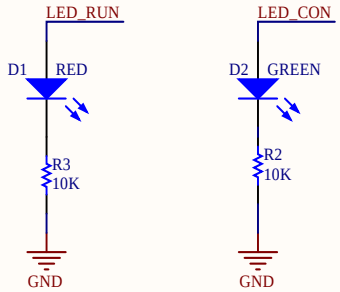

HEADER

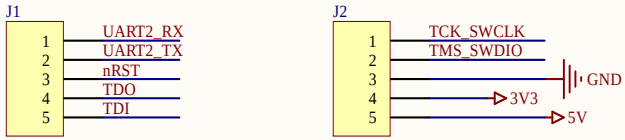

POWER

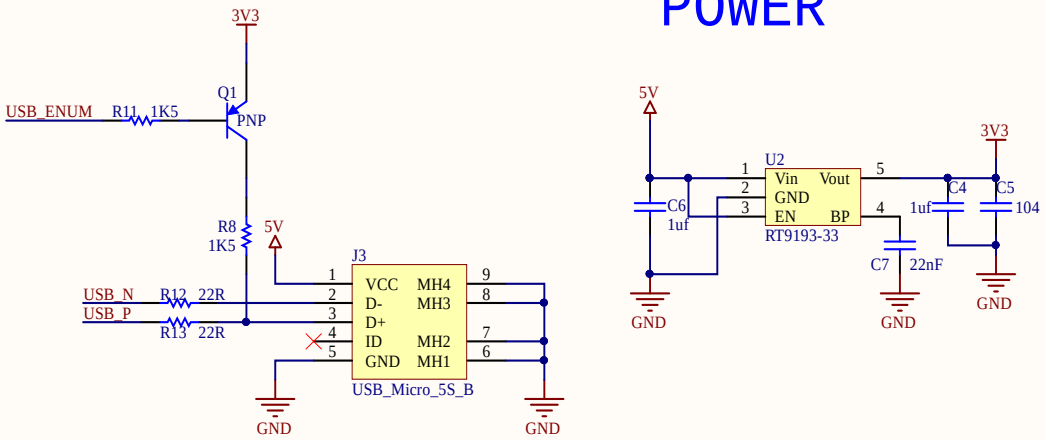

NRF24L01

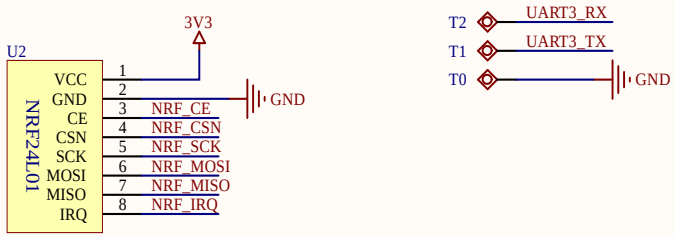

Title		
Size A4	Number	Revision
Date: 2019/7/31		Sheet of
File: G:\private\..\nanoDAP.SchDoc		Drawn By: