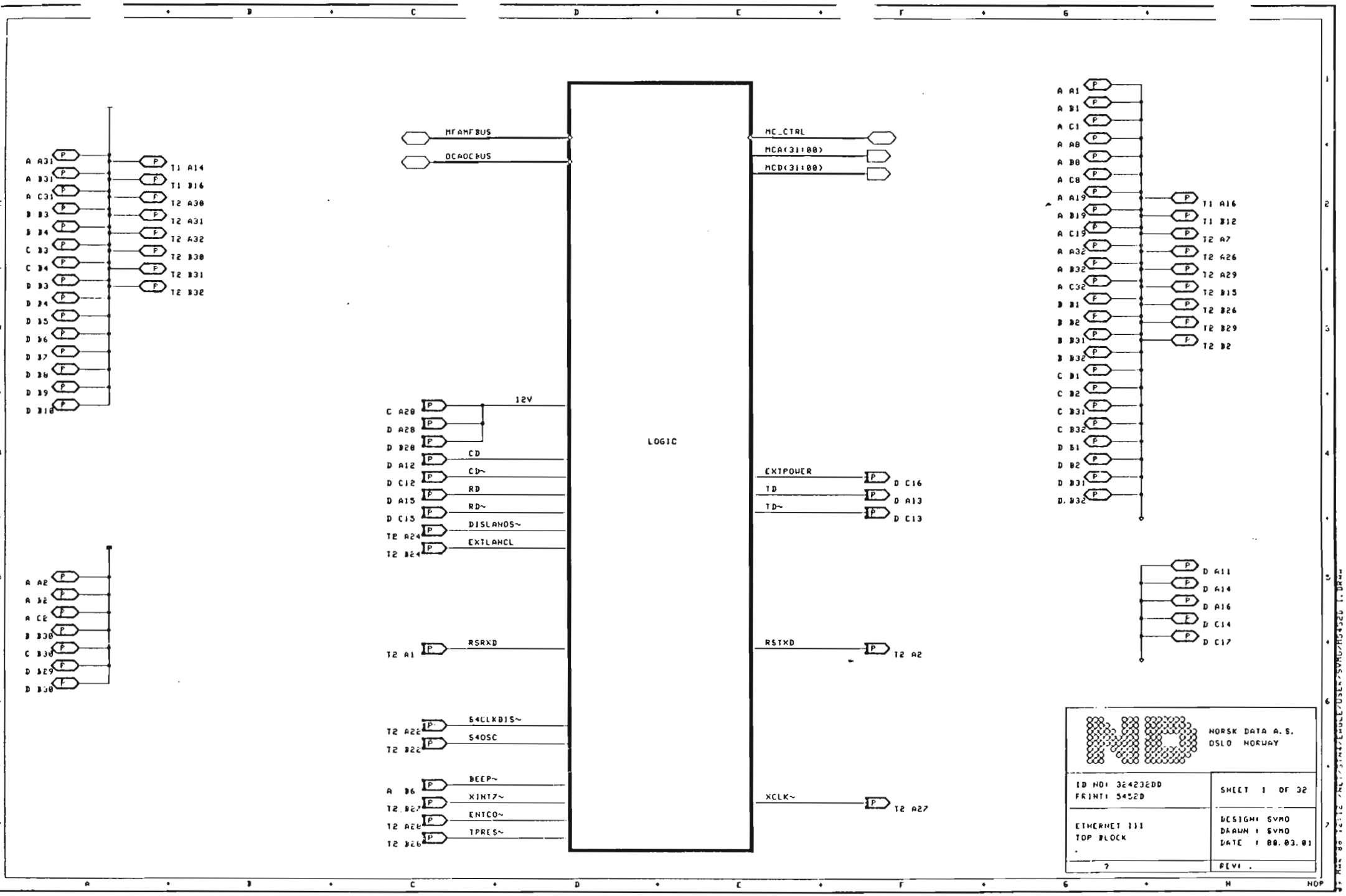

Scanned by Jonny Oddene for Sintran Data © 2026

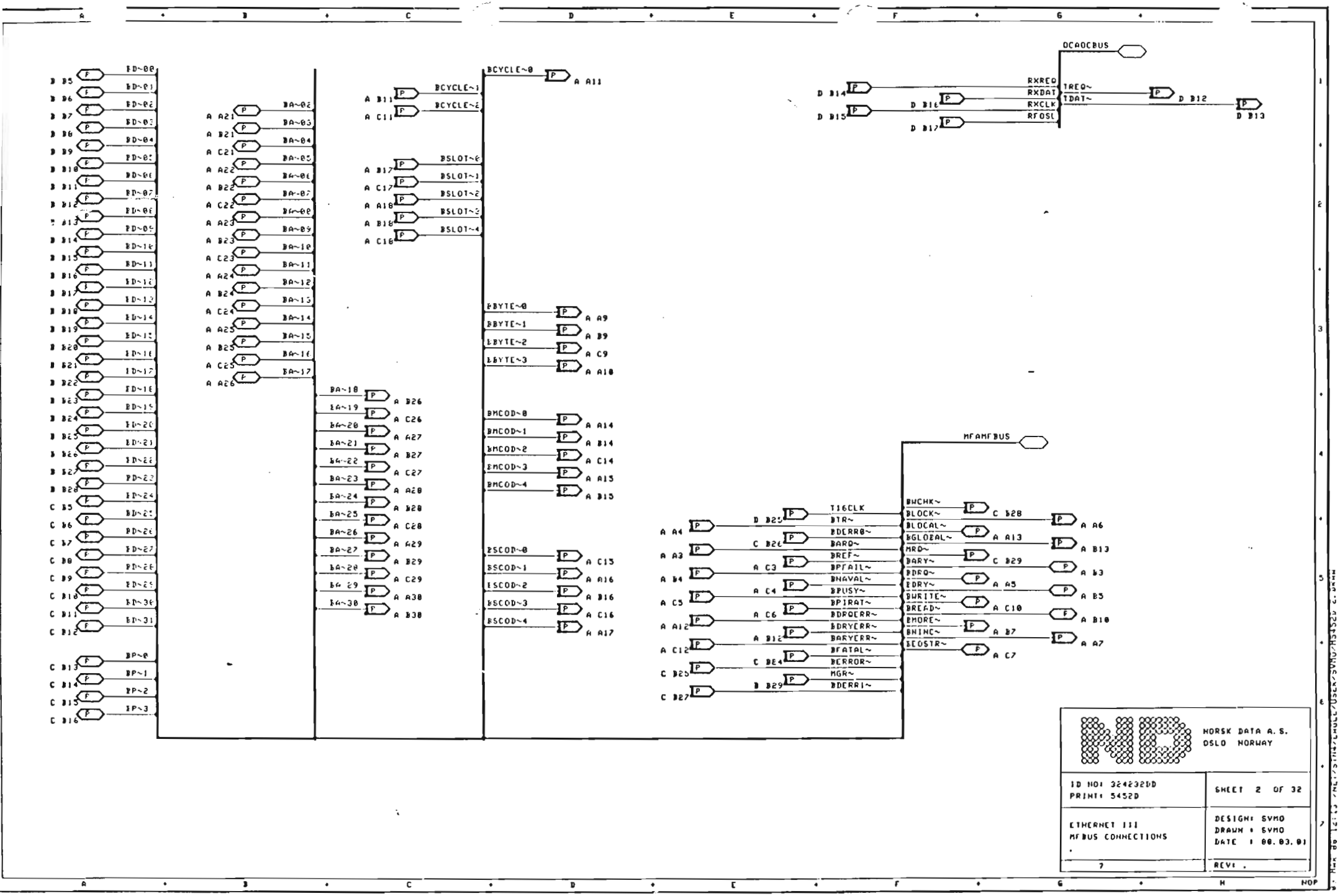

Scanned by Jonny Oddene for Sintran Data © 2026

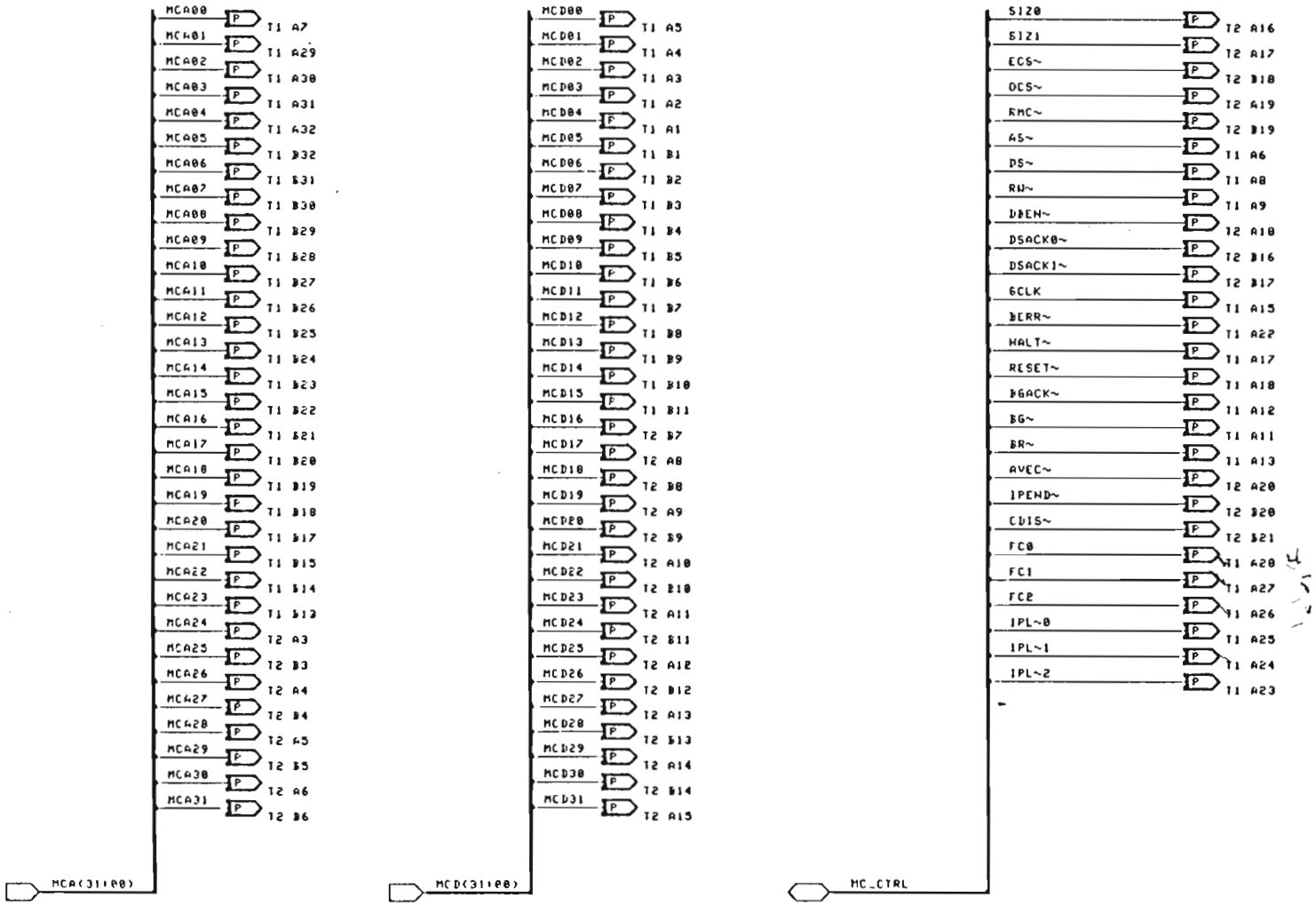

NORSK DATA A.S.
OSLO NORWAY

ID NO: 324232DD
PRINT: 5452D

SHEET 3 OF 32

ETHERNET III
TEST CONNECTORS

DESIGN: SVMO
DRAWN : SVMO
DATE : 88.03.01

REV: .

Scanned by Jonny Oddene for Sintran Data © 2026

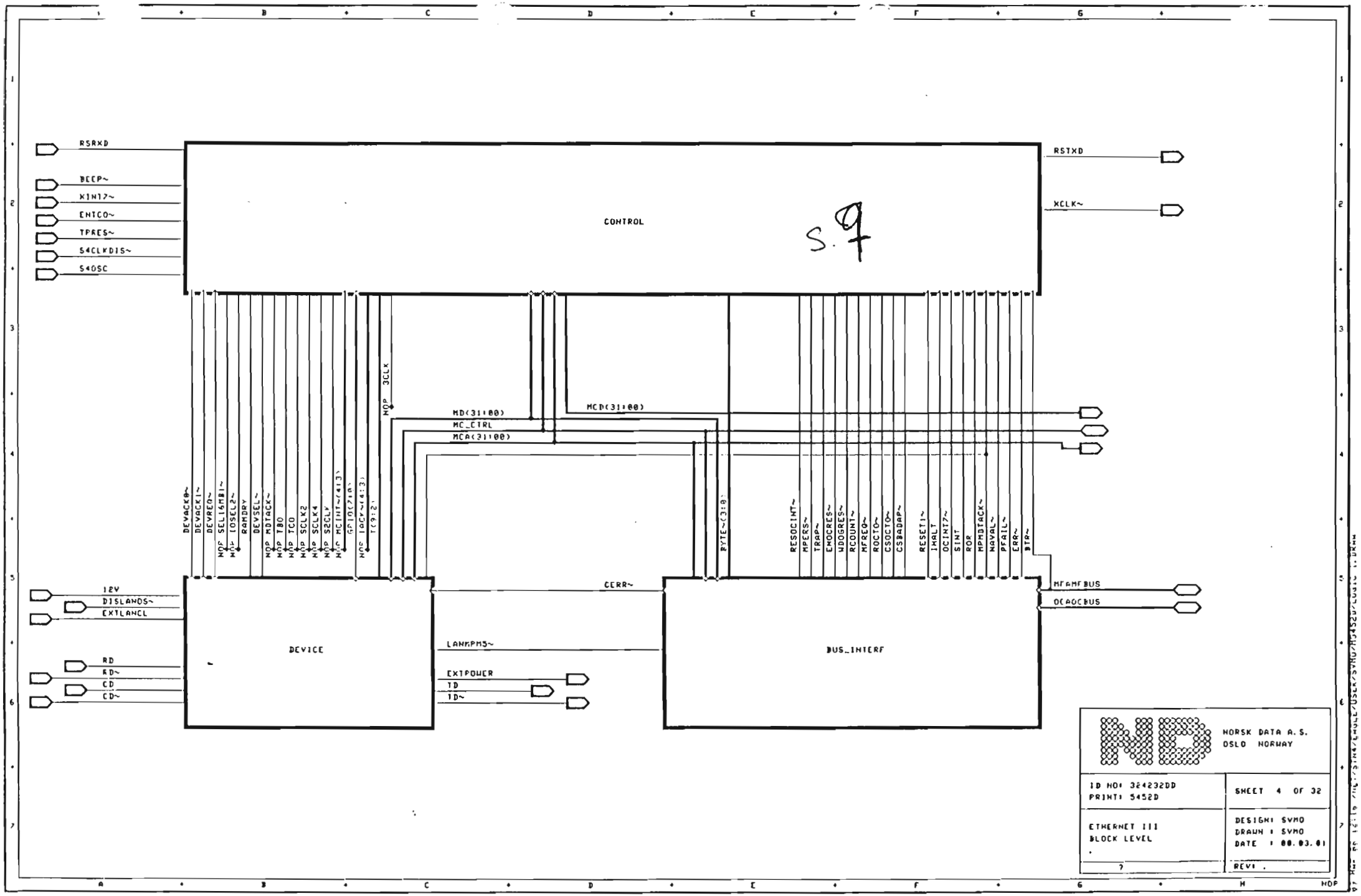

Scanned by Jonny Oddene for Sintran Data © 2026

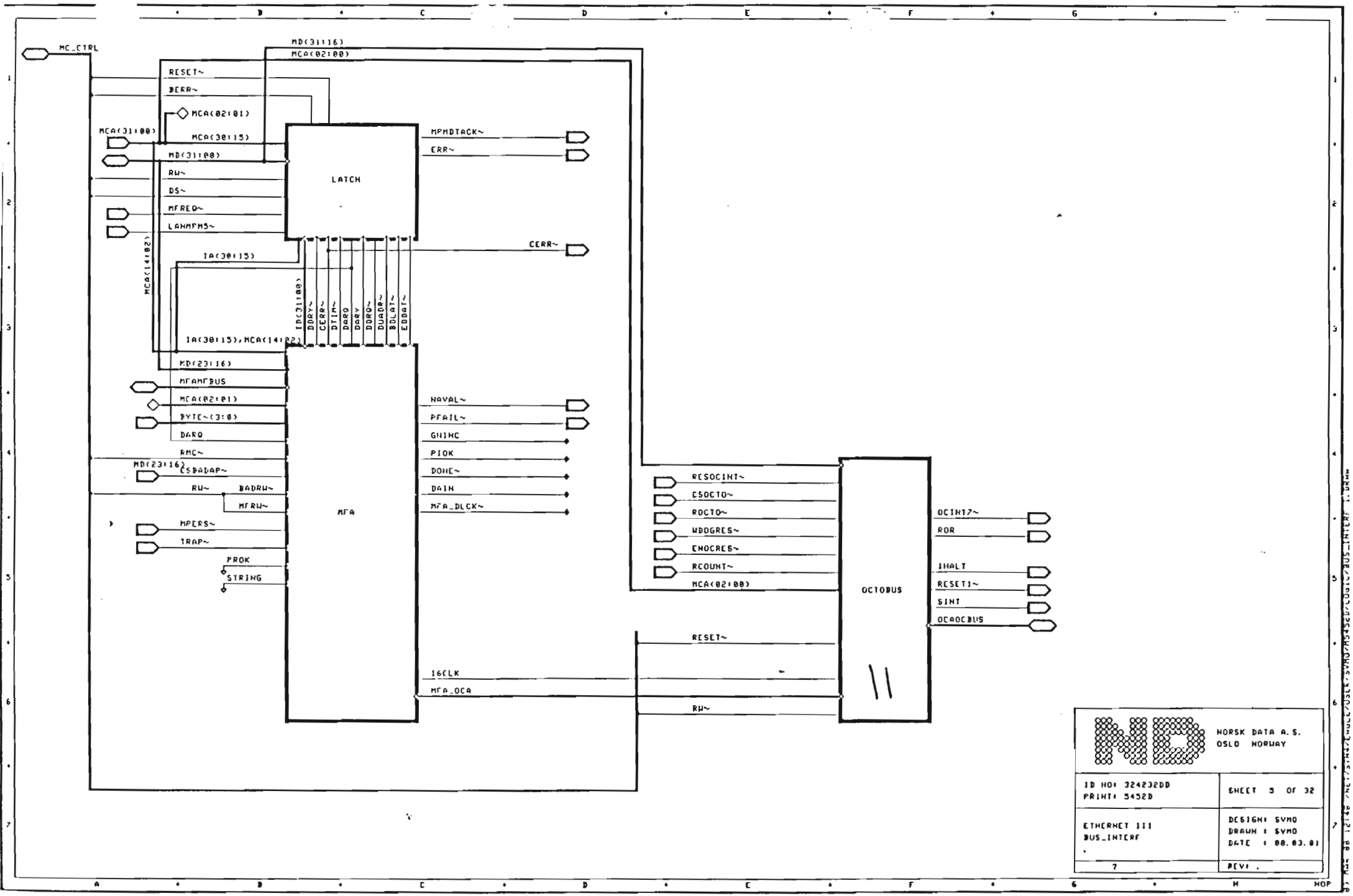

Scanned by Jonny Oddene for Sintran Data © 2026

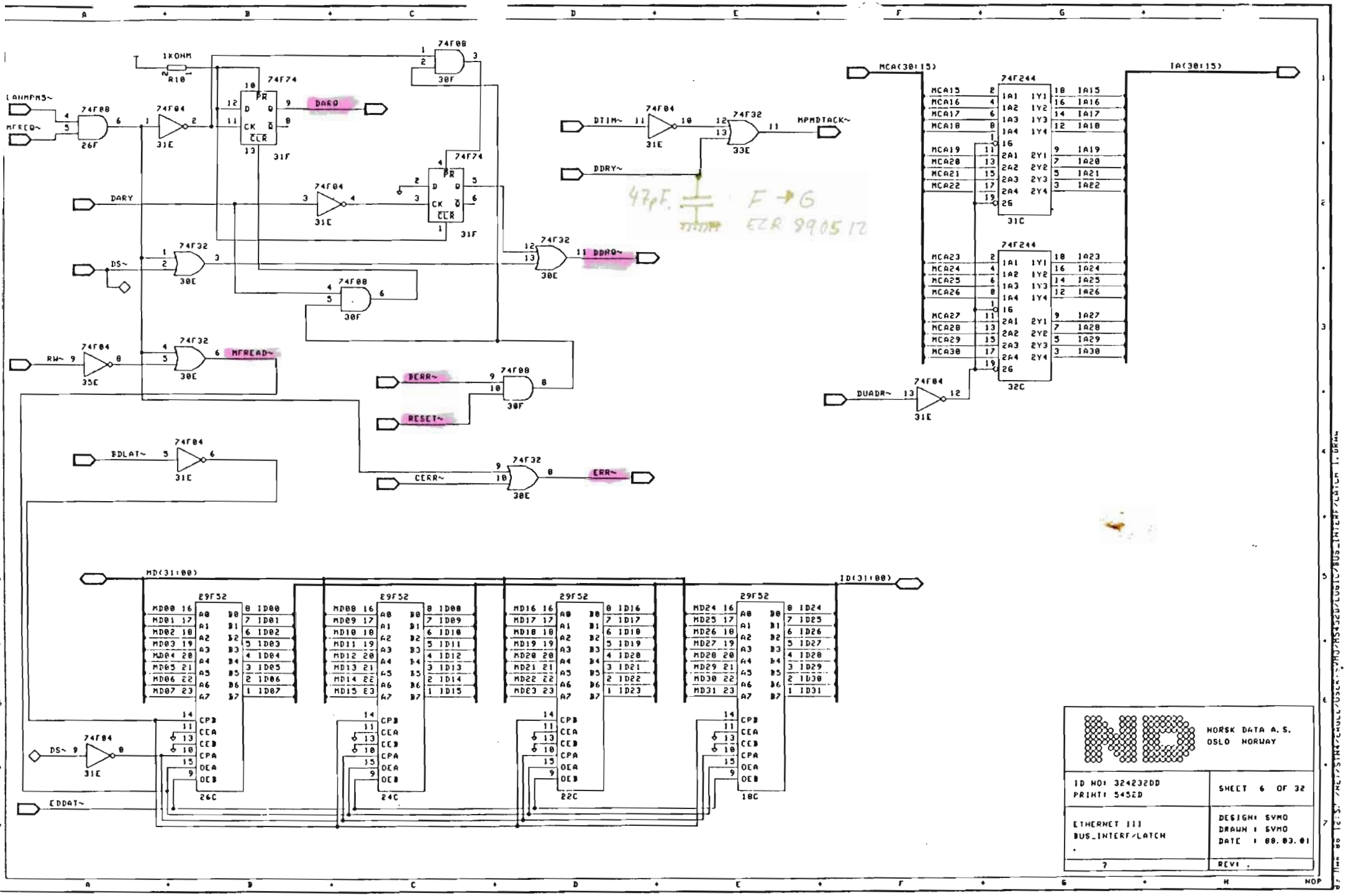

Scanned by Jonny Oddene for Sintran Data © 2026

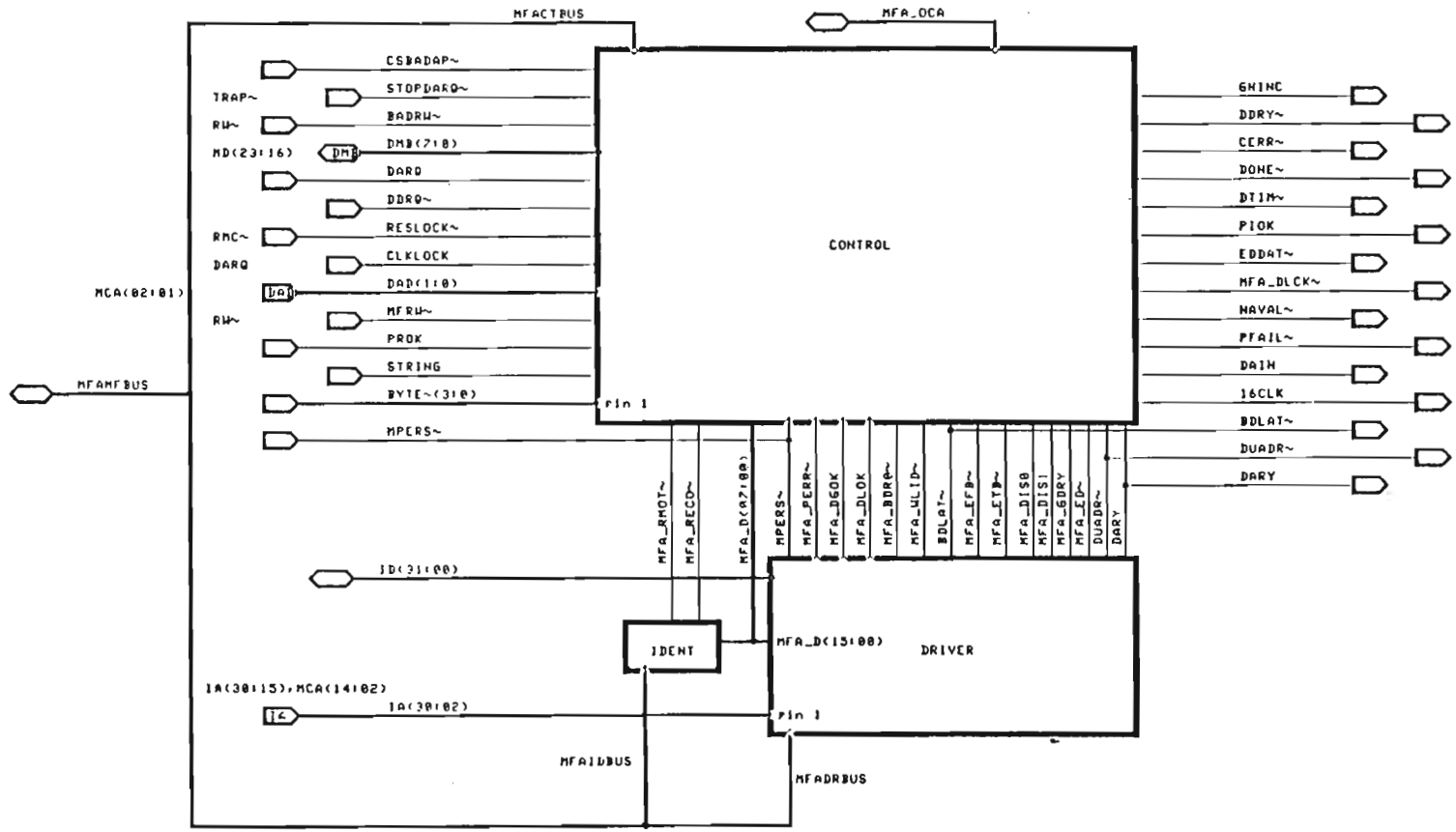

NORSK DATA A.S.
OSLO NORWAY

ID NO: 324232DD PRINT: 5452D	SHEET 7 OF 32
ETHERNET III BUS_INTERF/MFA .	DESIGN: SVMO DRAWN : SVMO DATE : 80.03.01
7	REV: .

Scanned by Jonny Oddene for Sintran Data © 2026

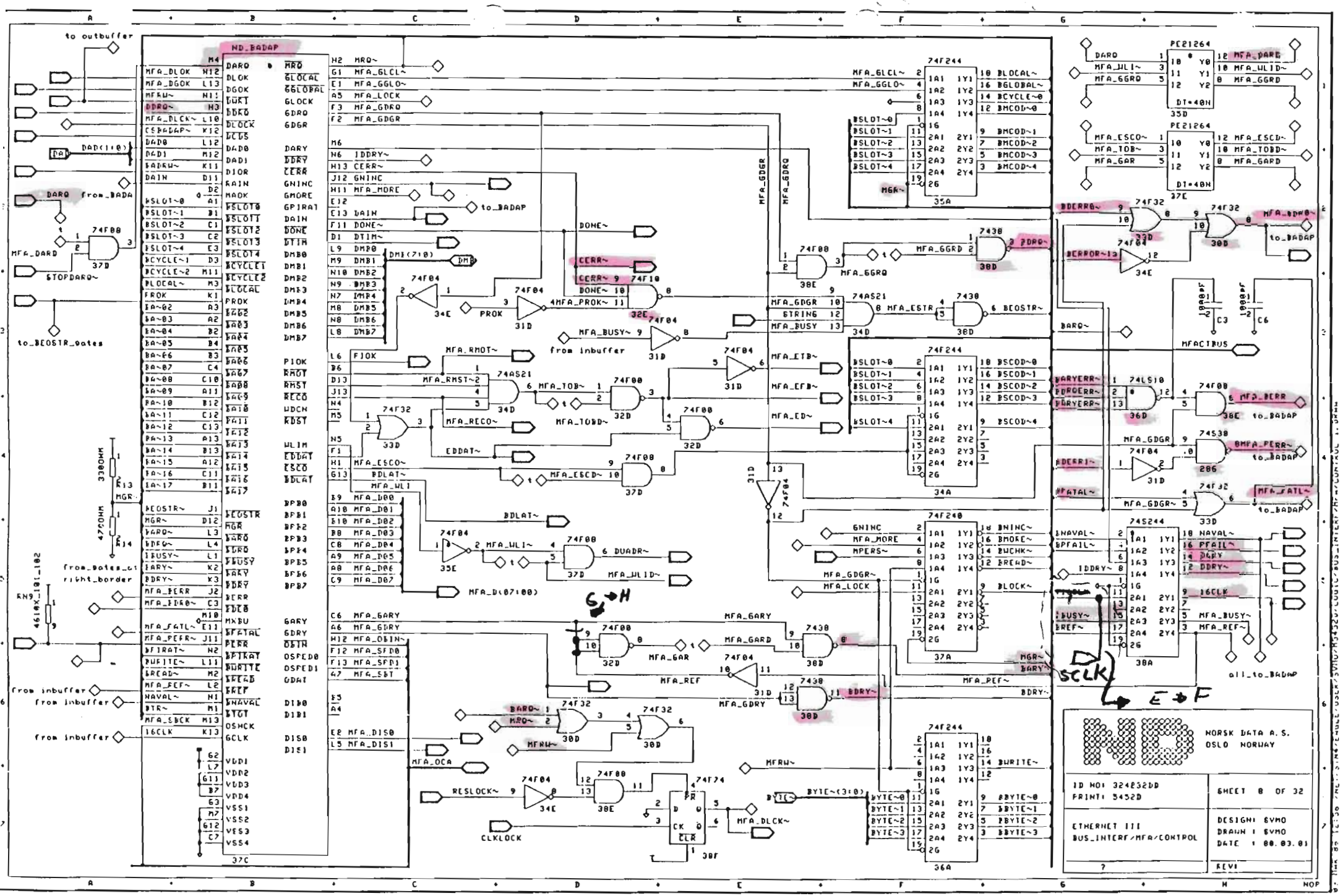

Scanned by Jonny Oddene for Sintran Data © 2026

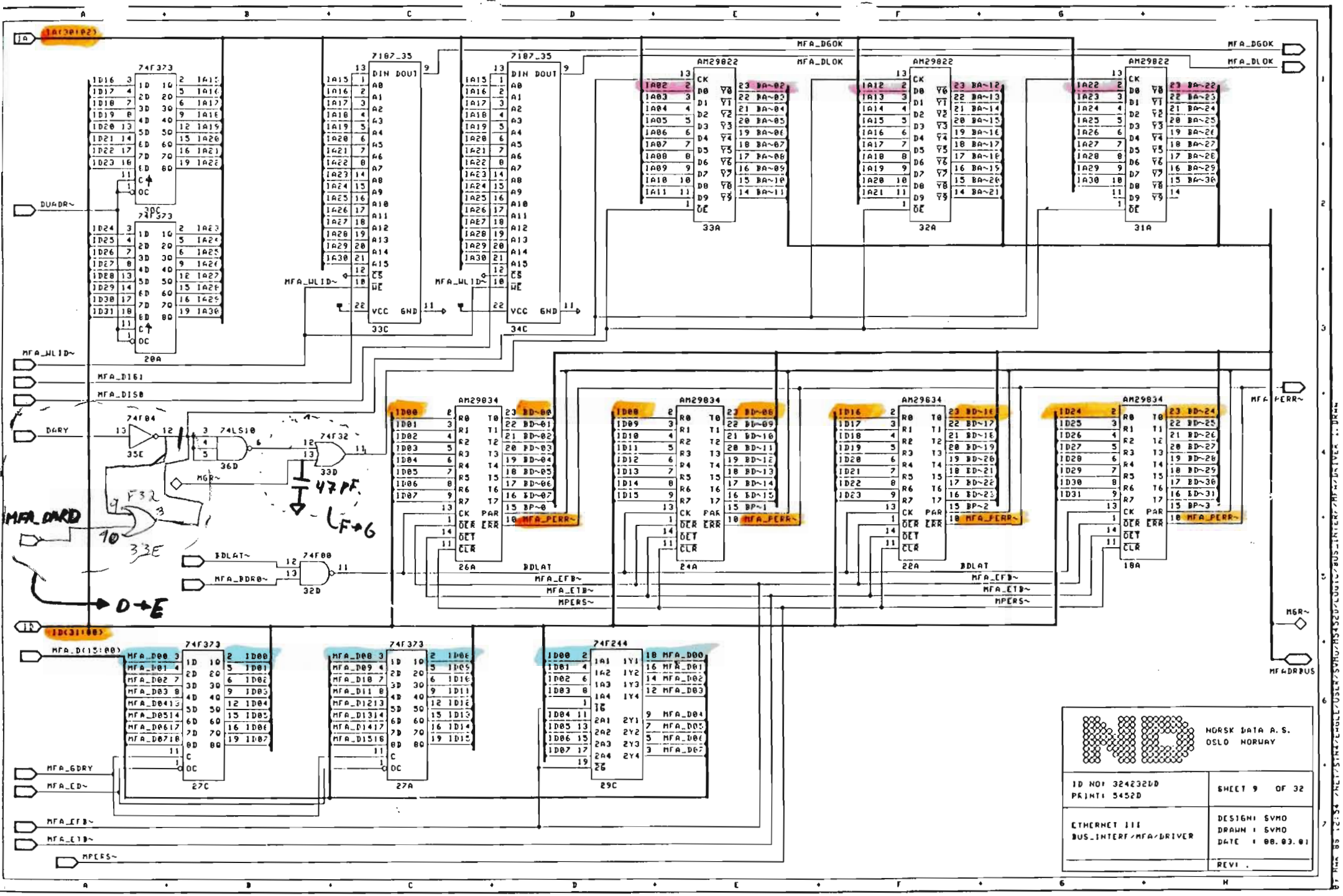

Scanned by Jonny Oddene for Sintran Data © 2026

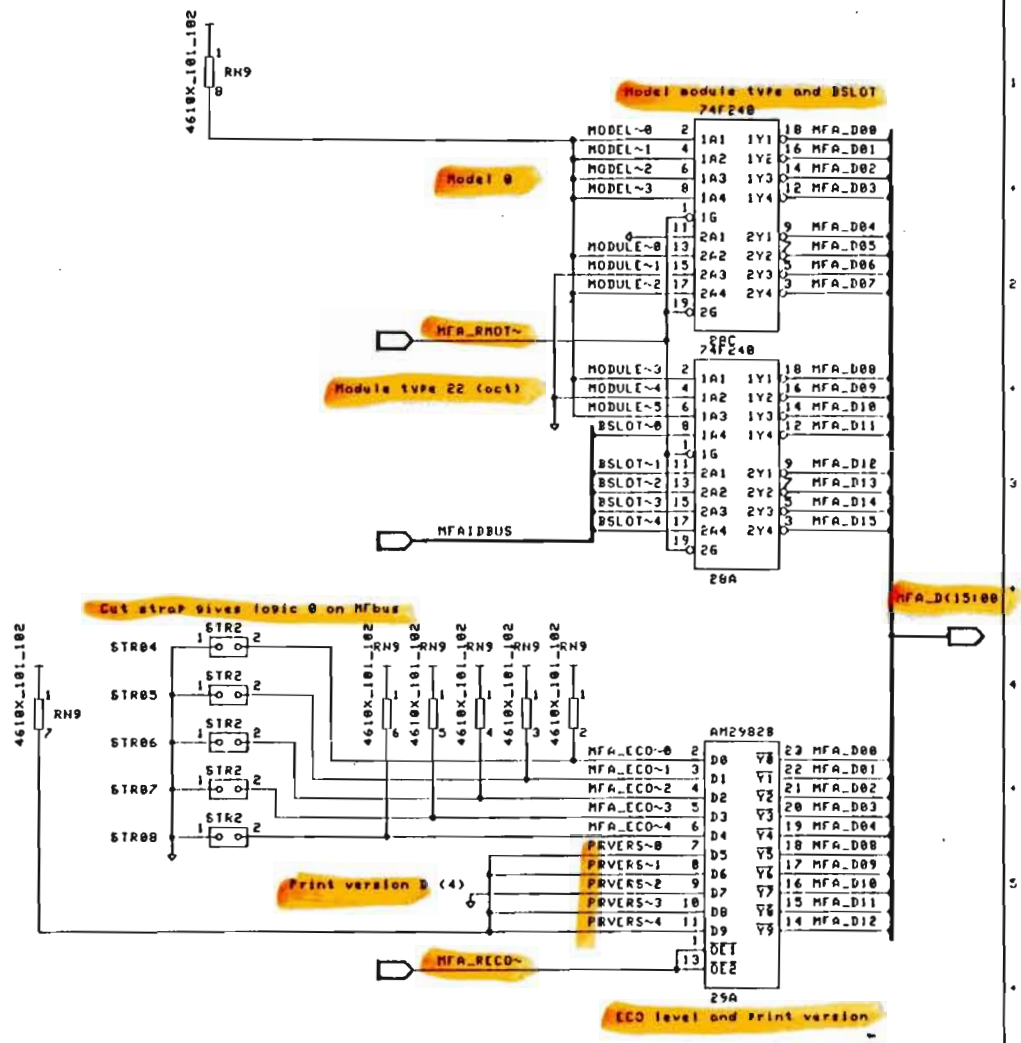

Scanned by Jonny Oddene for Sintran Data © 2026

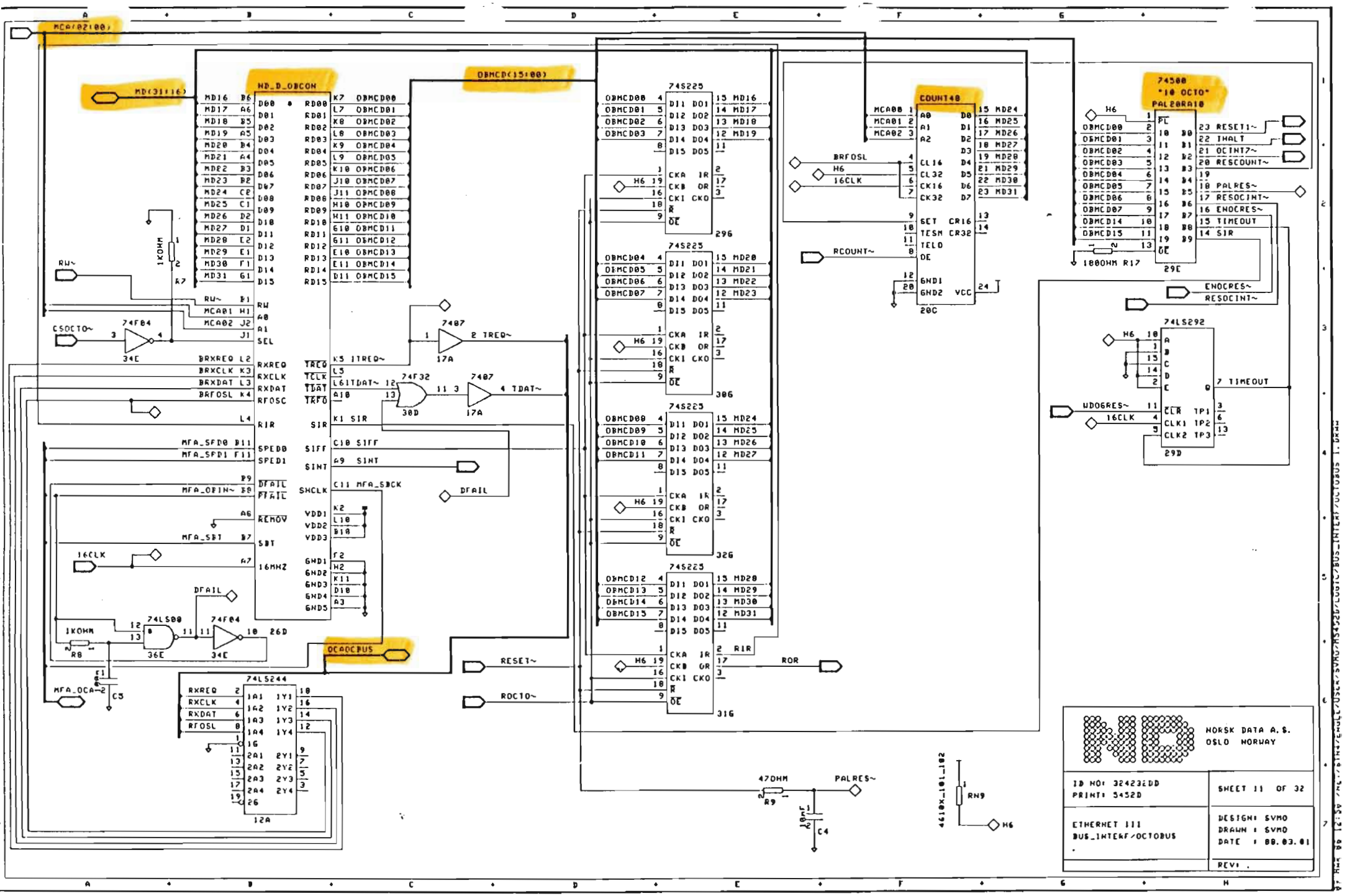

Scanned by Jonny Oddene for Sintran Data © 2026

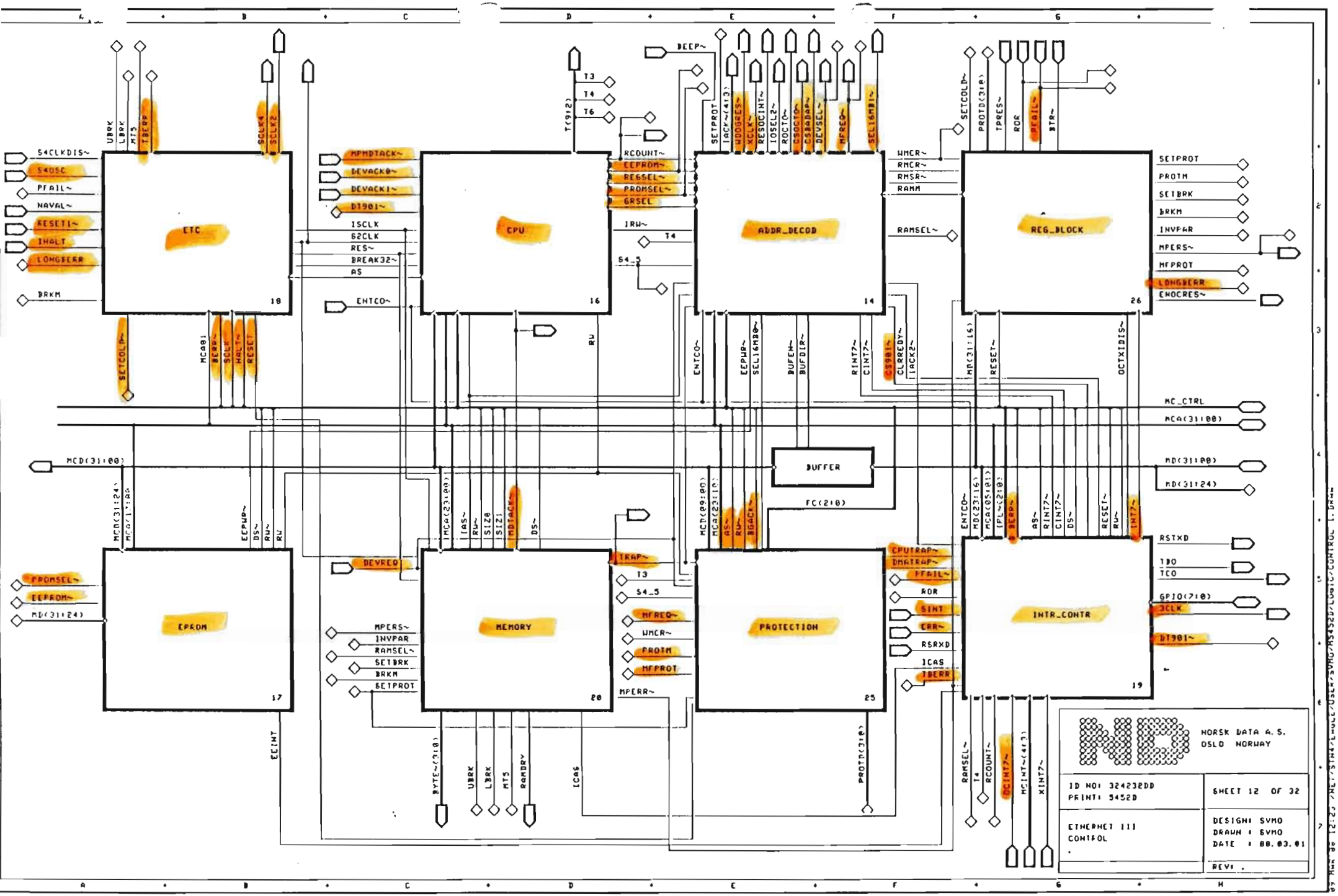

Scanned by Jonny Oddene for Sintran Data © 2026

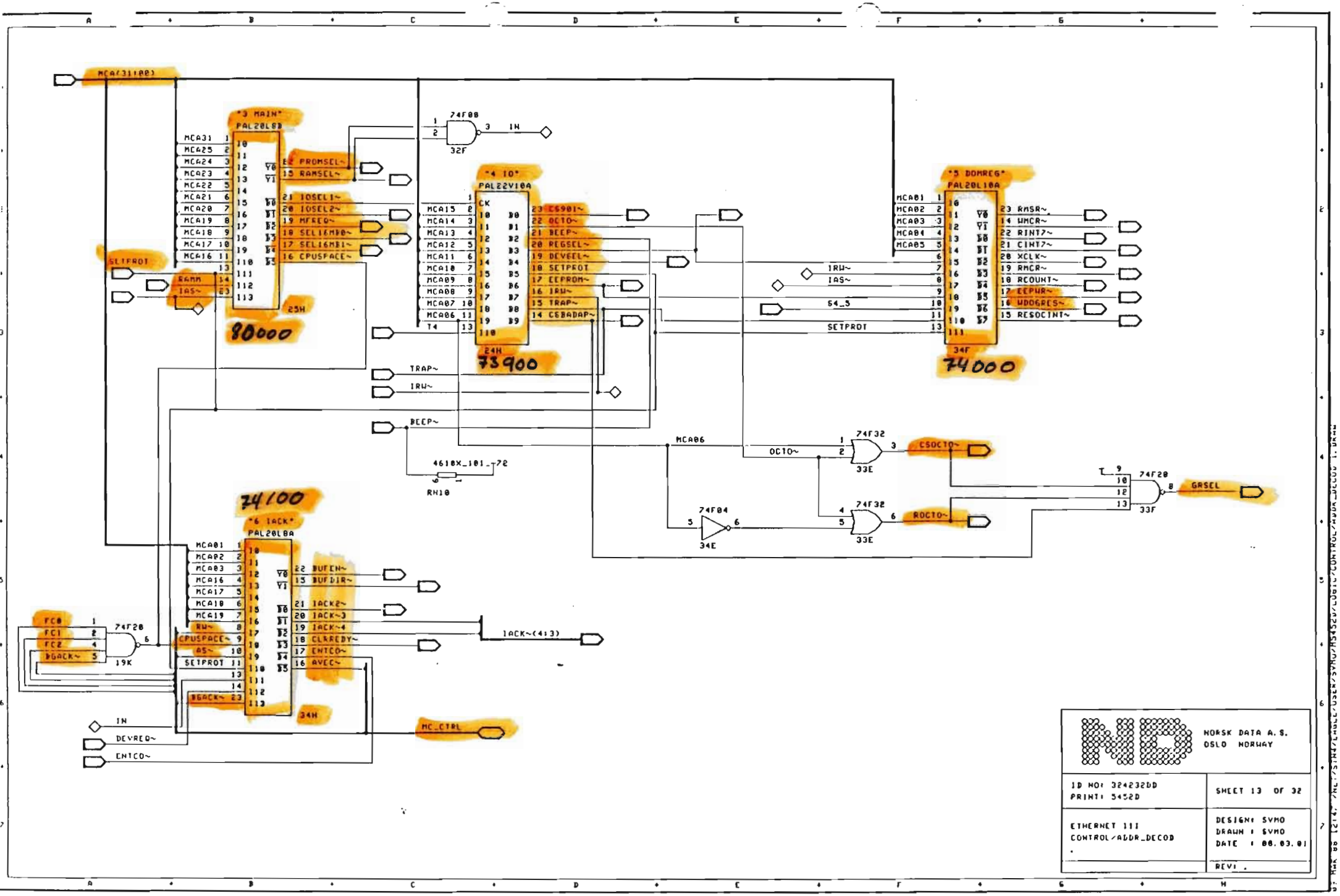

Scanned by Jonny Oddene for Sintran Data © 2026

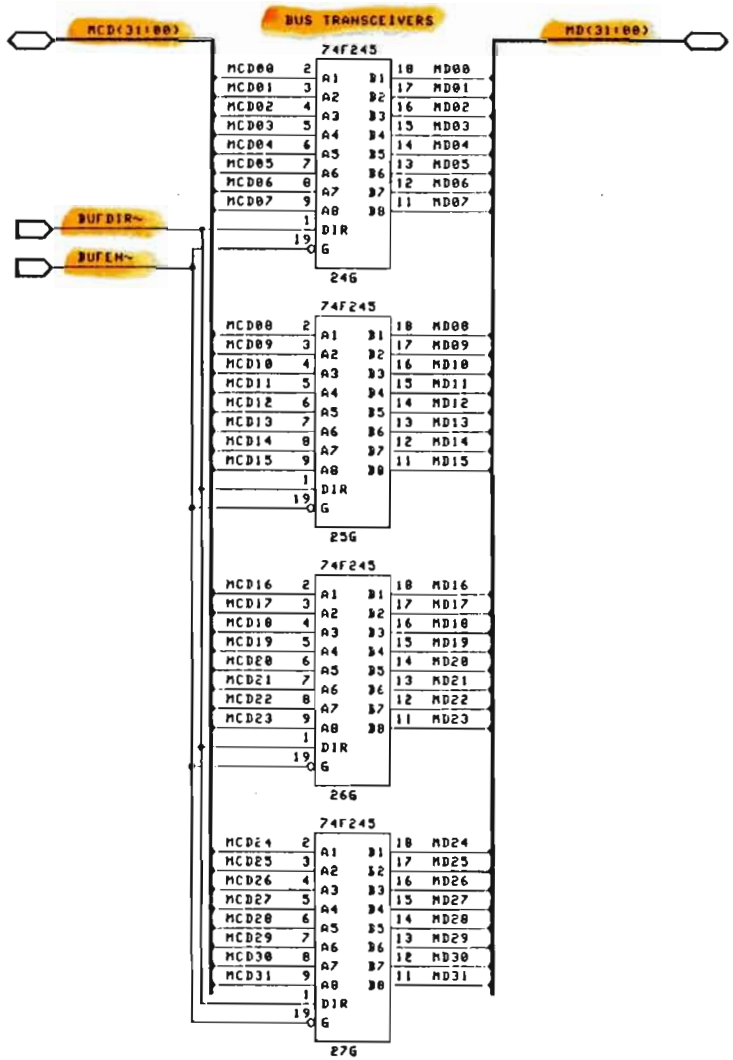

NORSK DATA A.S.
OSLO NORWAY

ID NO: 324232DD PRINT: 5452D	SHEET 14 OF 32
ETHERNET III CONTROL/BUFFER .	DESIGN: SVMO DRAWN : SVMO DATE : 88.03.01 REV: .

Scanned by Jonny Oddene for Sintran Data © 2026

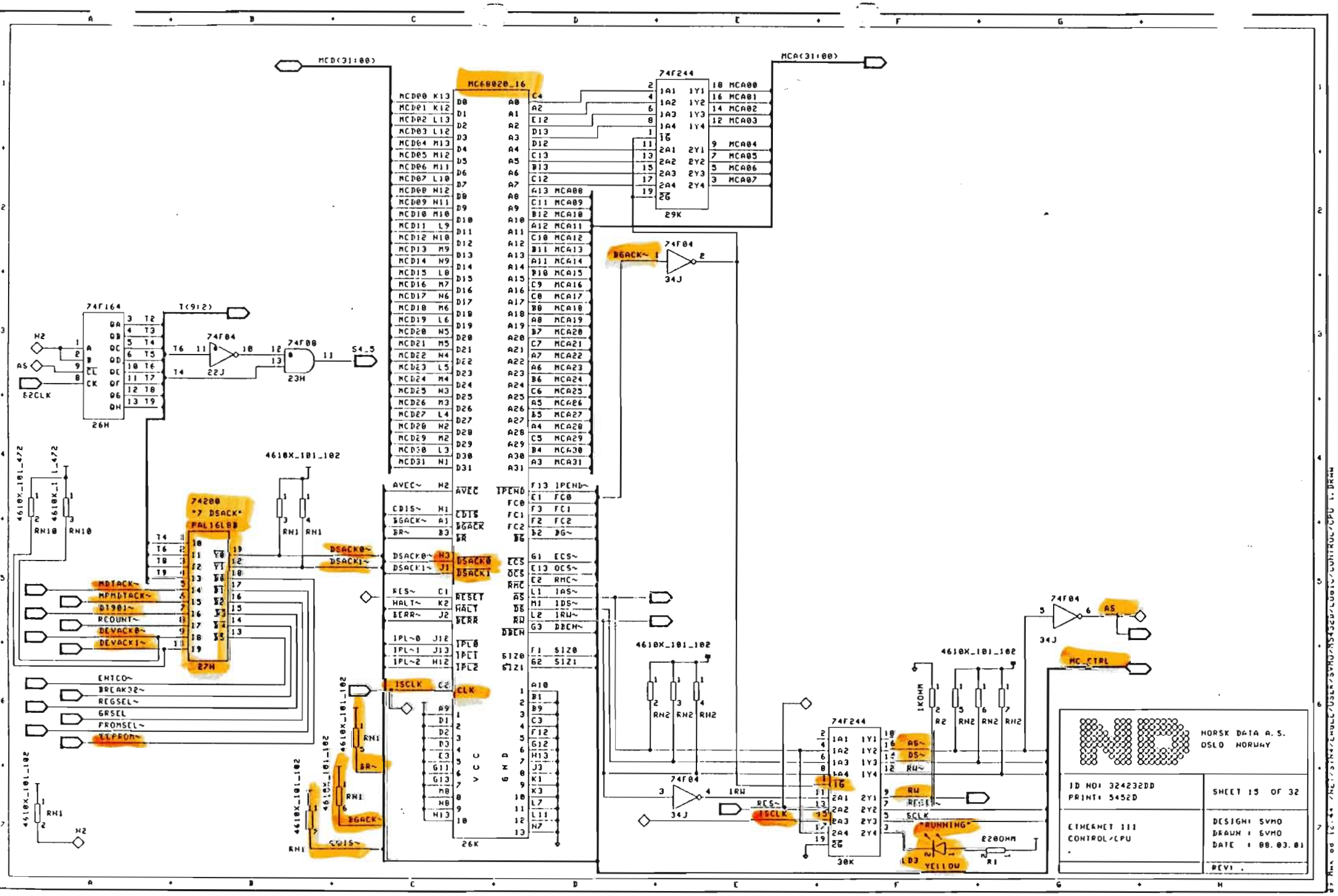

Scanned by Jonny Oddene for Sintran Data © 2026

BOTH EPROMS 27512 AND 27C101 MAY BE USED IN THE SOCKETS
IF 27512 IS USED, PIN 1 OF THIS PACKAGE SHOULD BE IN PIN 3 OF THE SOCKET

THE EPROMS MAY BE SUBSTITUTED BY SRAM HM62256

DEFAULT STRAPPING IS FOR EPROM
WHEN SRAM, CUT STRAPS BETWEEN PIN 1 AND 2, AND CONNECT PIN 2 AND 3

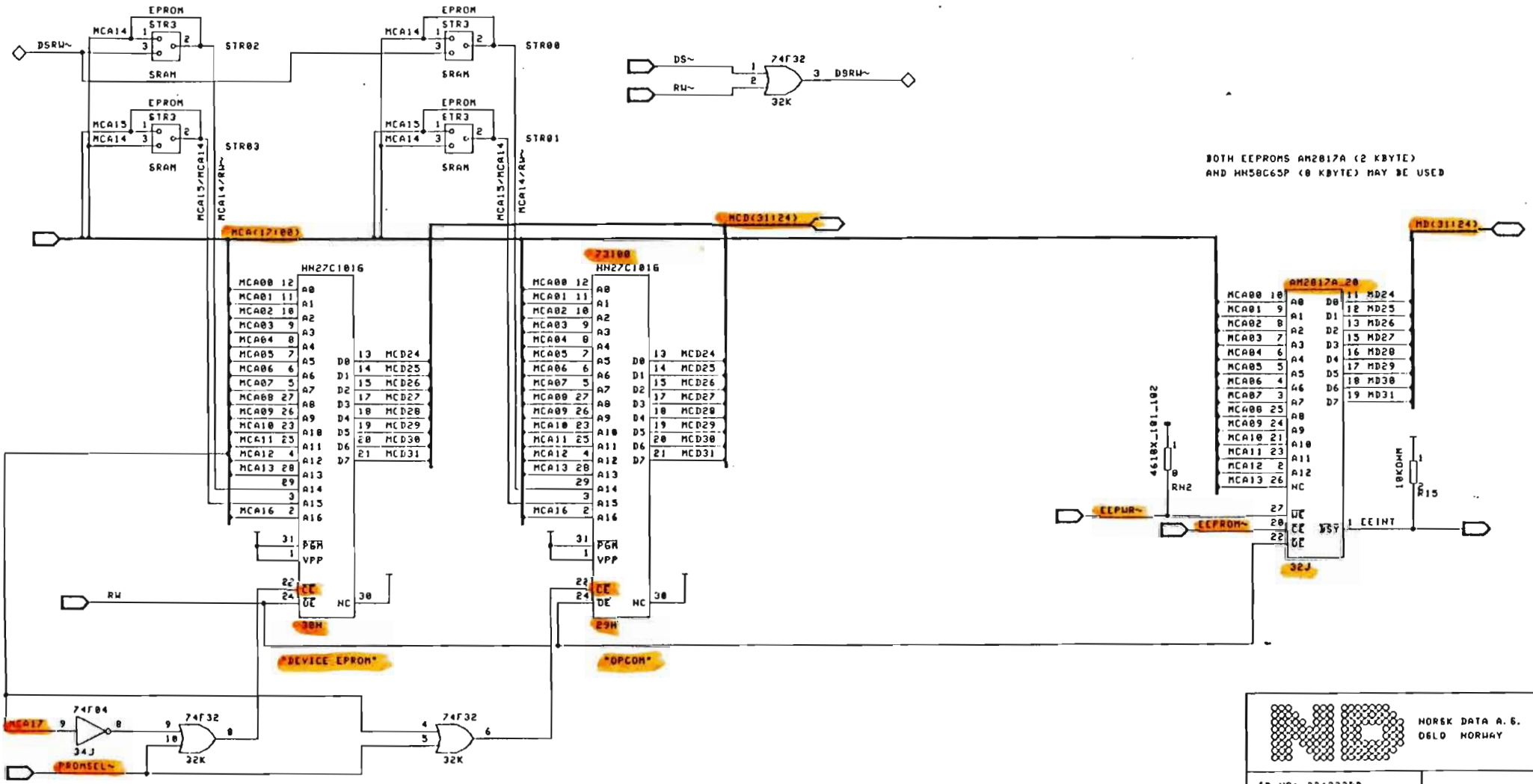

NORSK DATA A.S.
OSLO NORWAY

ID NO: 324232DD PRINT: 5452D	SHEET 16 OF 32
ETHERNET III CONTROL/EPROM	DESIGN: SVMO DRAWN : SVMO DATE : 08.03.81
7	REV: .

Scanned by Jonny Oddene for Sintran Data © 2026

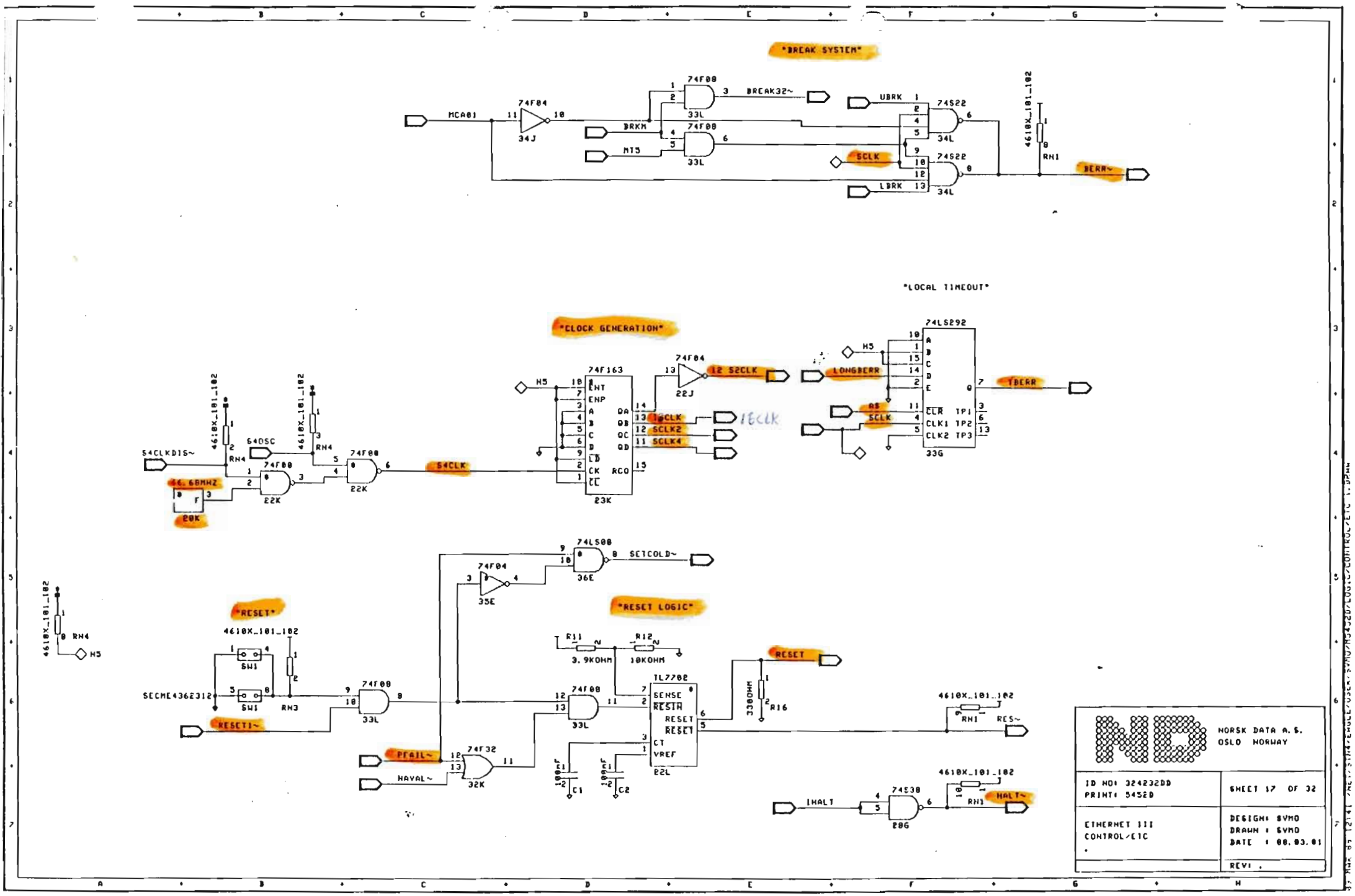

Scanned by Jonny Oddene for Sintran Data © 2026

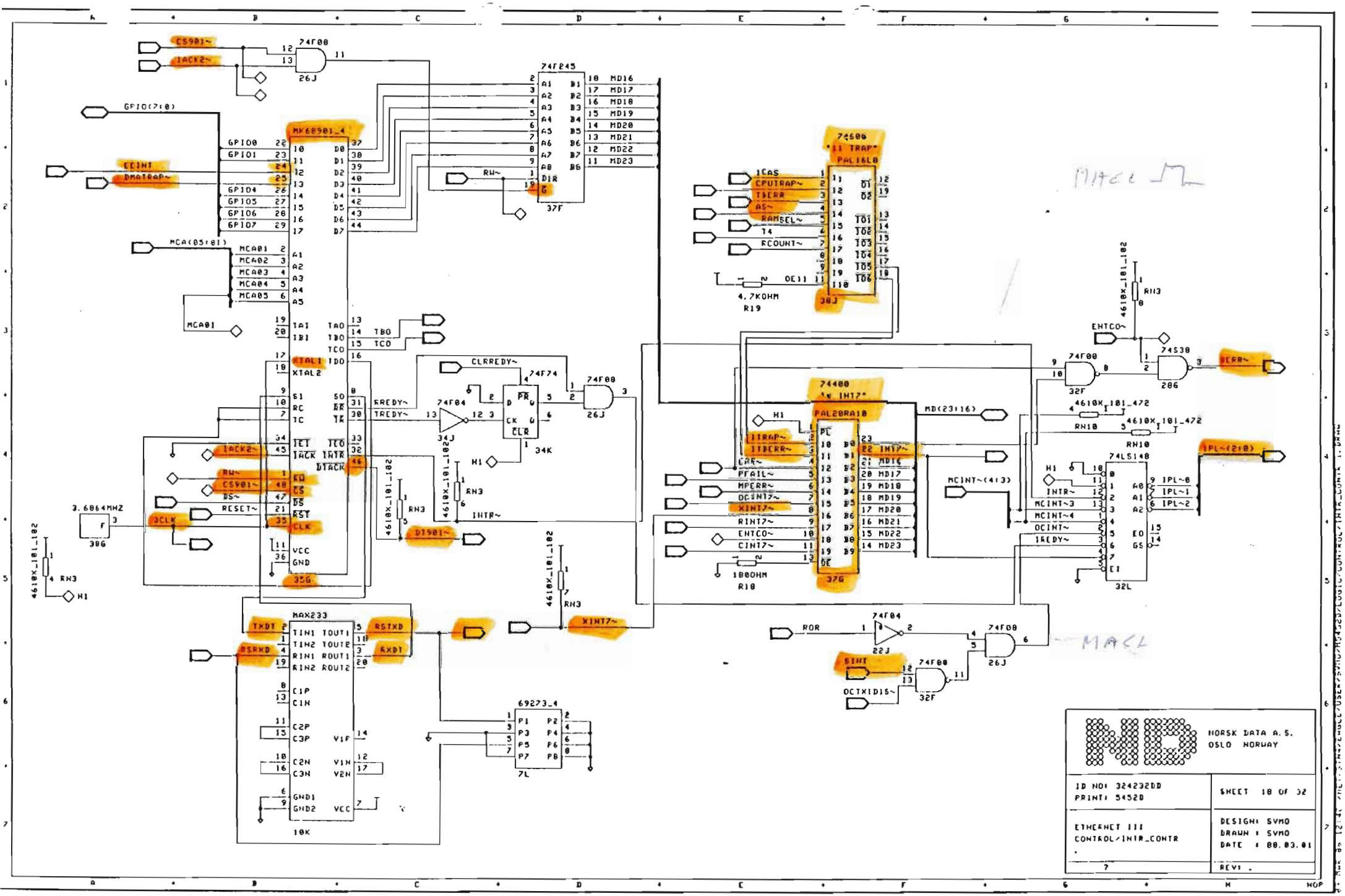

Scanned by Jonny Oddene for Sintran Data © 2026

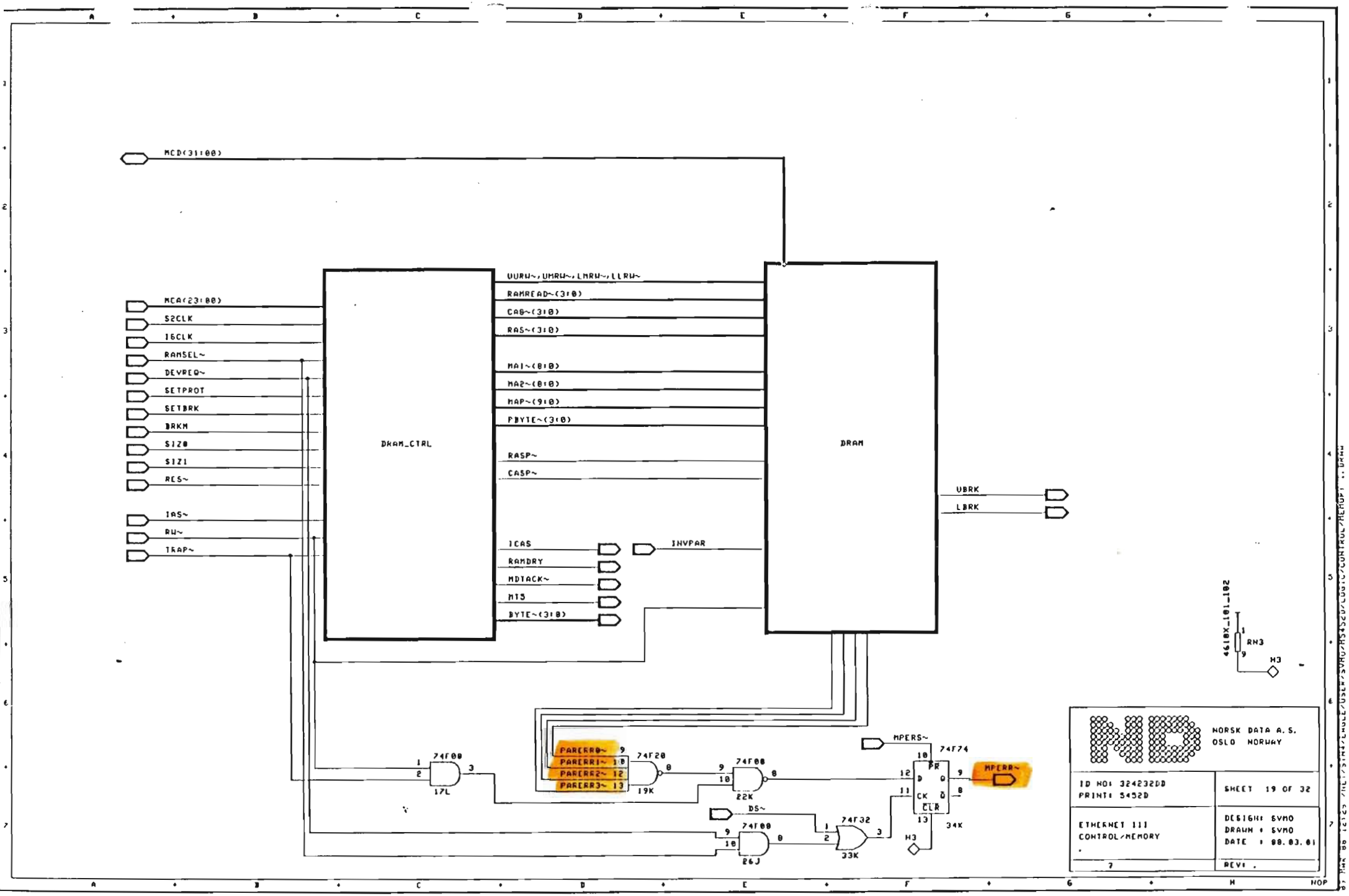

Scanned by Jonny Oddene for Sintran Data © 2026

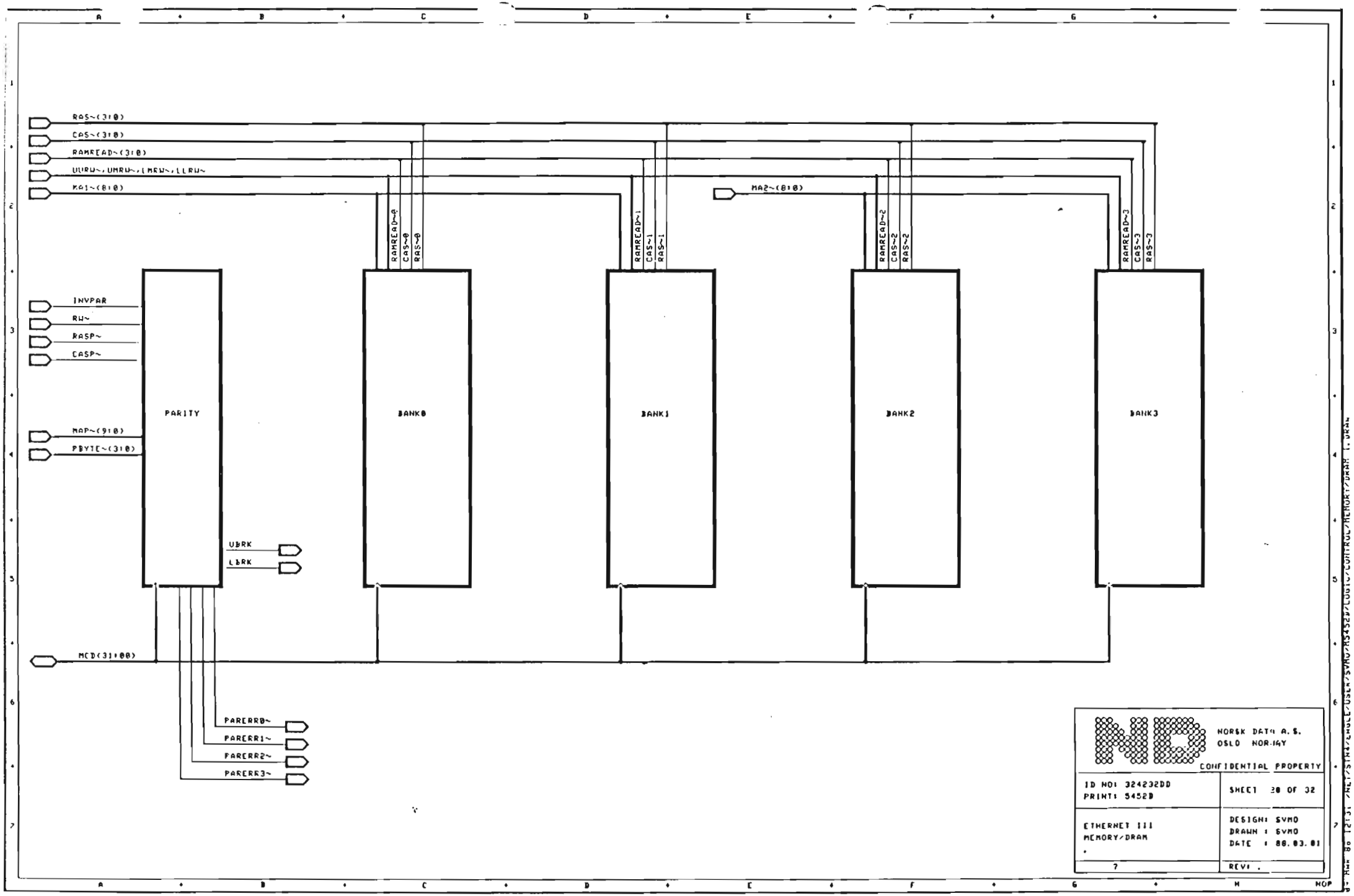

Scanned by Jonny Oddene for Sintran Data © 2026

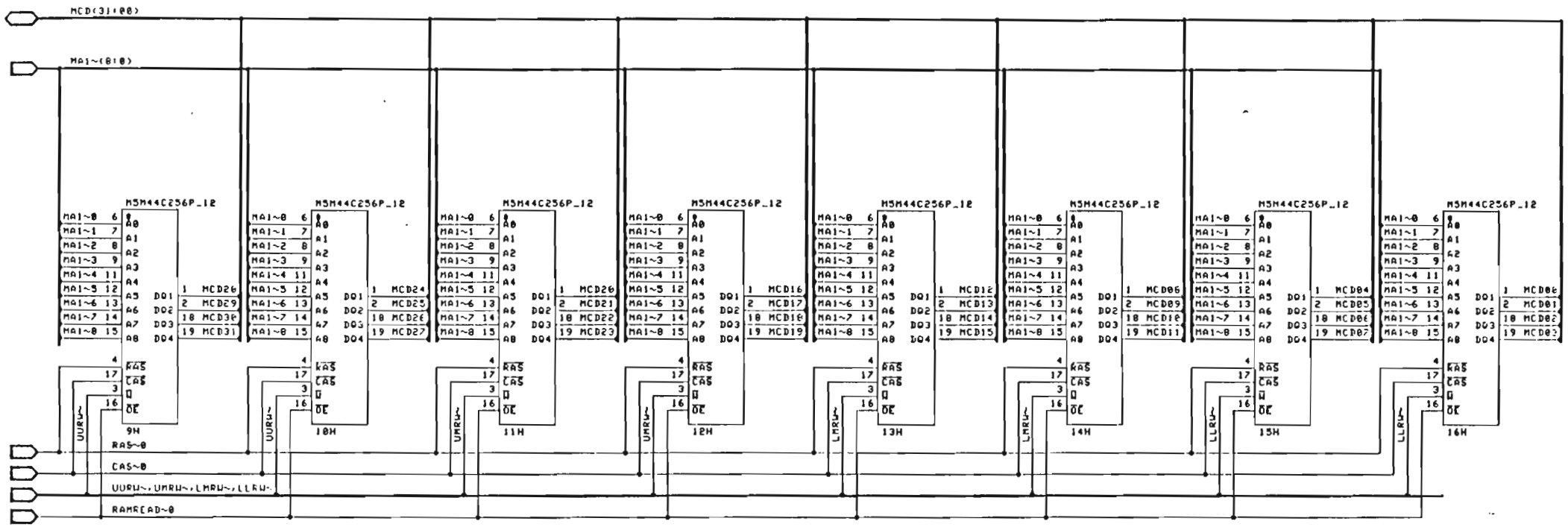

NORSK DATA A.S.
OSLO NORWAY

CONFIDENTIAL PROPERTY

ID NO: 324232DD PRINT: 5452D	SHEET 21 OF 32
ETHERNET III MEMORY/DRAM/BANK0	DESIGN: SVMO DRAWN : SVMO DATE : 80.03.01
7	REV: .

Scanned by Jonny Oddene for Sintran Data © 2026

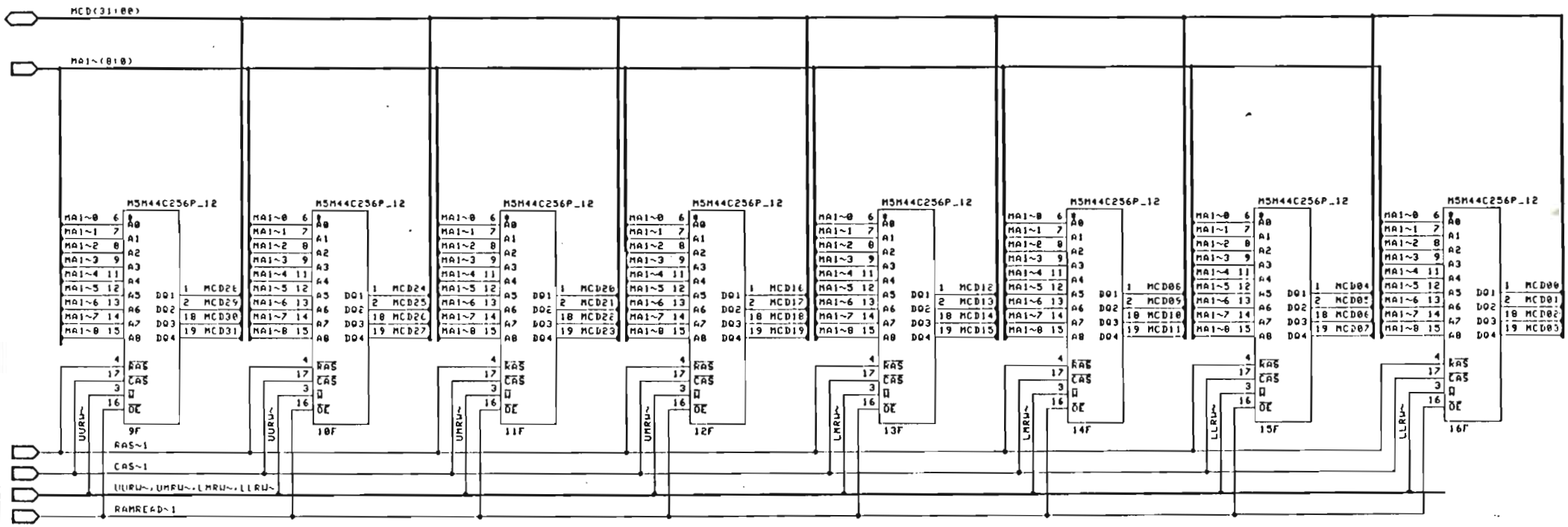

NORSK DATA A.S.
OSLO NORWAY
CONFIDENTIAL PROPERTY

ID NO: 324232DD PRINT: 5452D	SHEET 22 OF 32
ETHERNET III MEMORY/DRAM/BANK1	DESIGN: SVMO DRAWN : SVMO DATE : 88.03.01
7	REV: .

Scanned by Jonny Oddene for Sintran Data © 2026

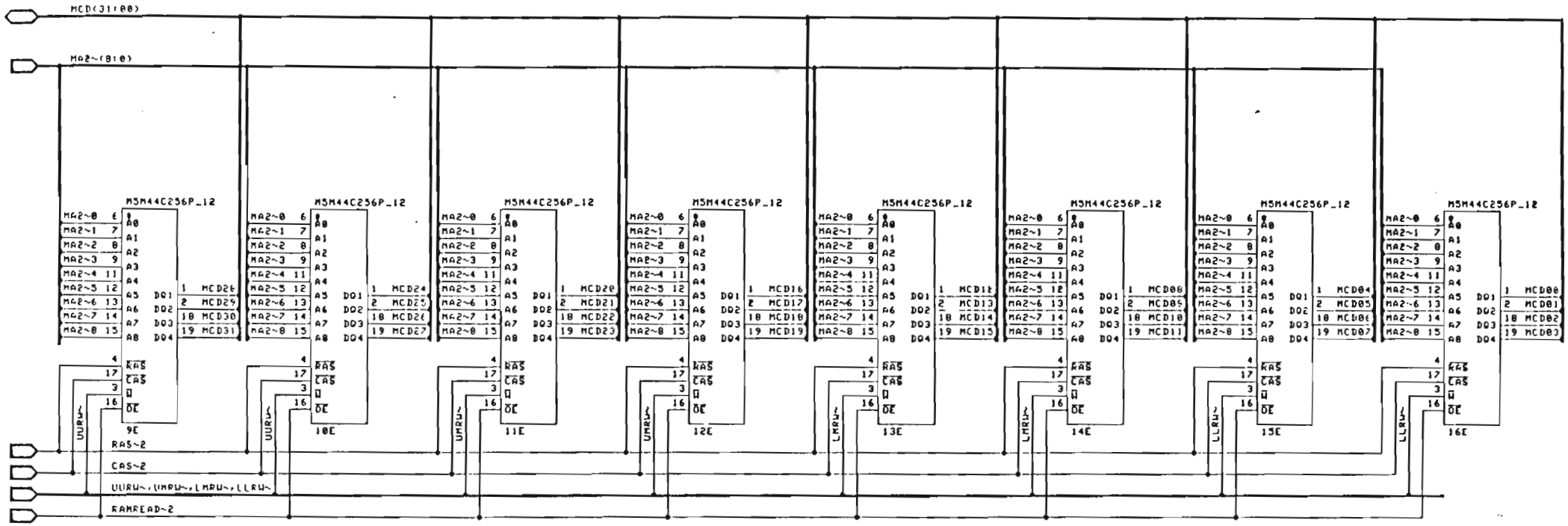

NORSK DATA A.S.
OSLO NORWAY

CONFIDENTIAL PROPERTY

ID NO: 324232DD PRINT: 5452D	SHEET 23 OF 32
ETHERNET III MEMORY/DRAM/BANK2 .	DESIGN: SVMO DRAWN : SVMO DATE : 88.03.01
7	REV: .

Scanned by Jonny Oddene for Sintran Data © 2026

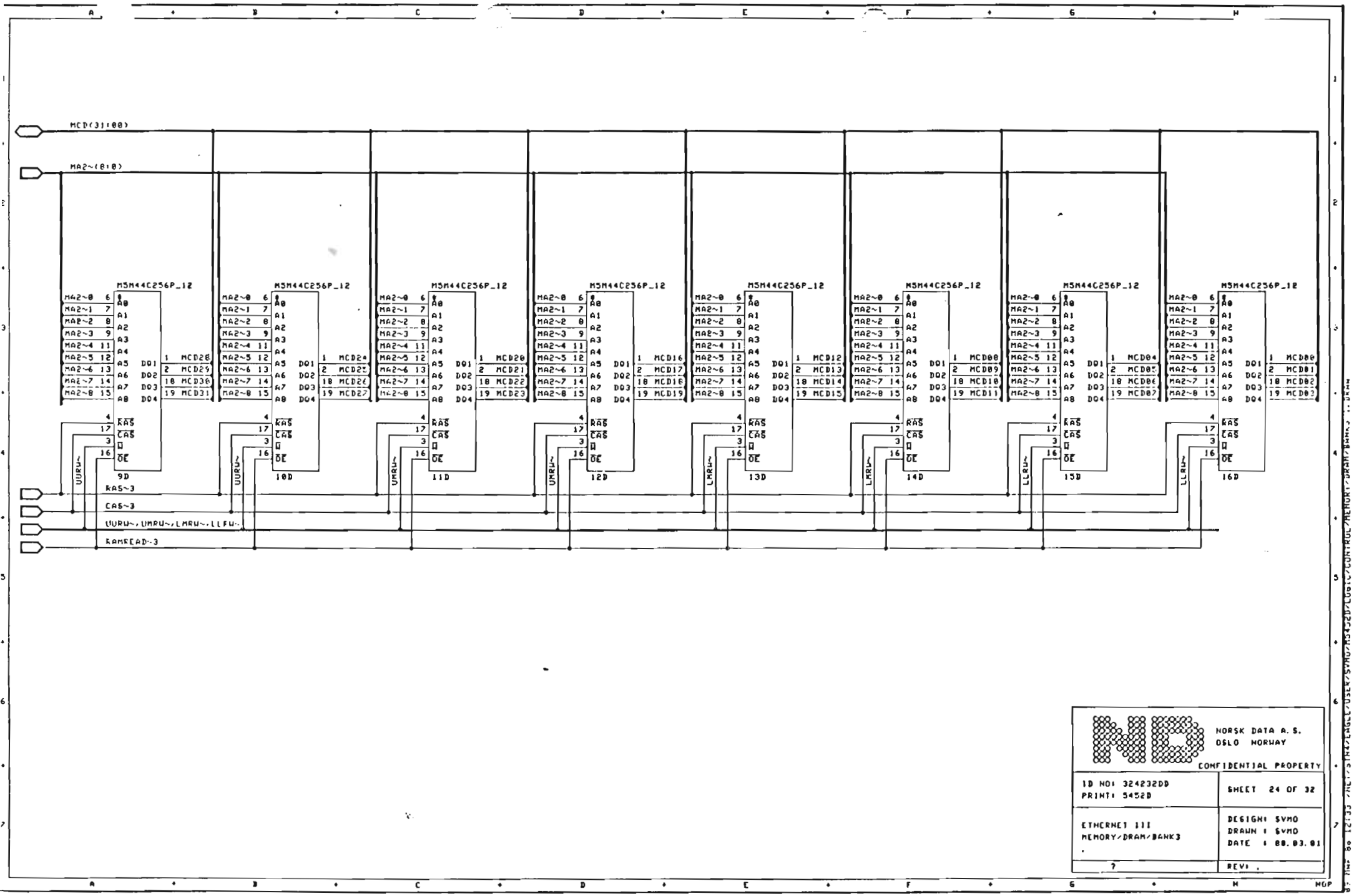

Scanned by Jonny Oddene for Sintran Data © 2026

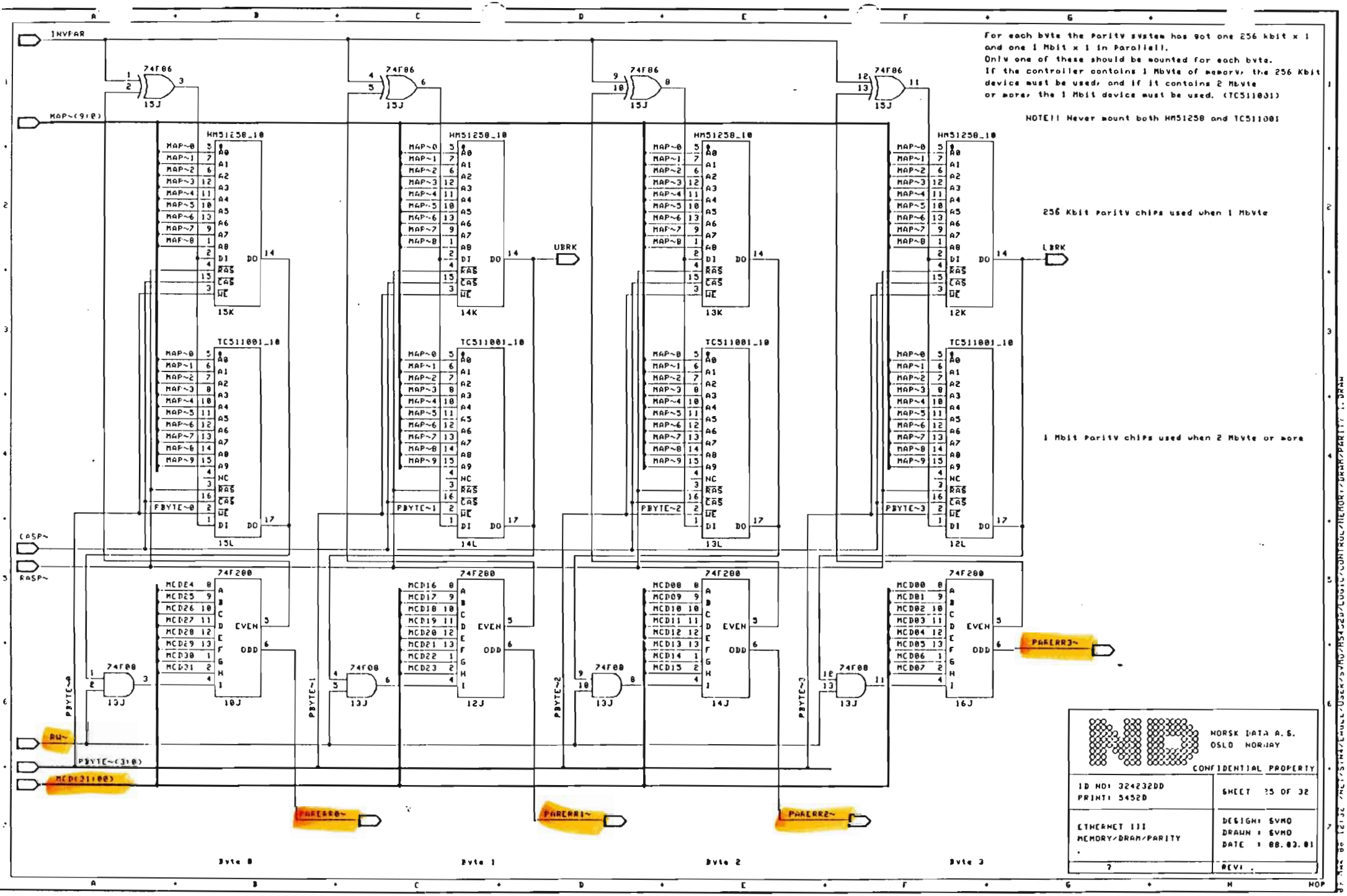

Scanned by Jonny Oddene for Sintran Data © 2026

IAS Kommer Fra 68020

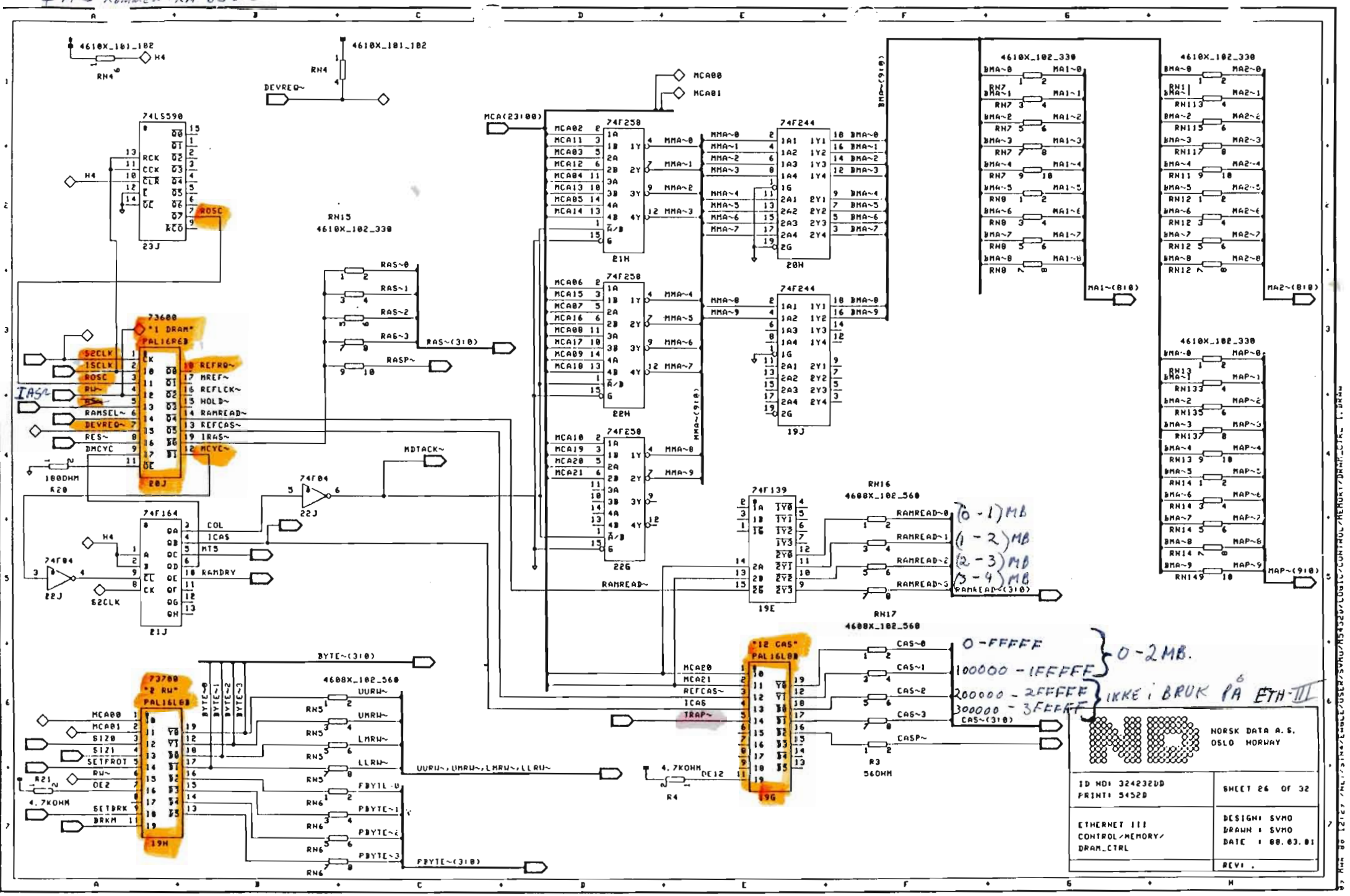

Scanned by Jonny Oddene for Sintran Data © 2026

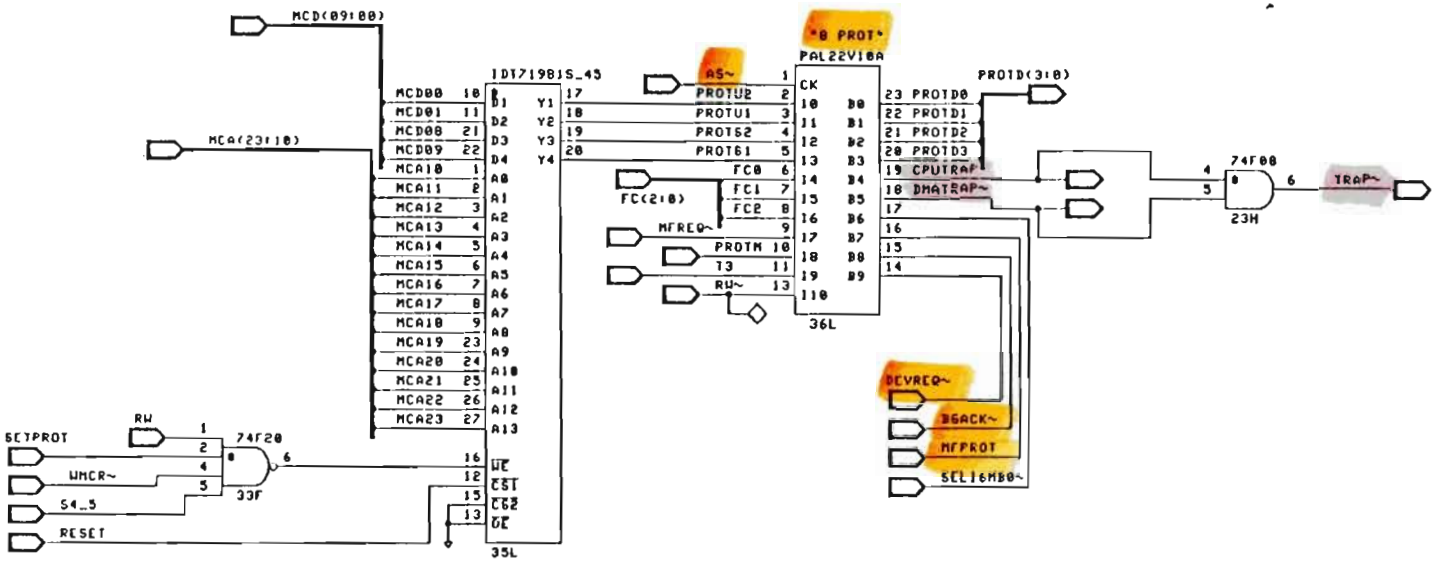

NORSK DATA A.S.
OSLO NORWAY

ID NO: 324232DD PRINT: 5452D	SHEET 27 OF 32
ETHERNET III CONTROL/PROTECTION	DESIGN: SVMO DRAWN : SVMO DATE : 88.03.01
	REV: .

Scanned by Jonny Oddene for Sintran Data © 2026

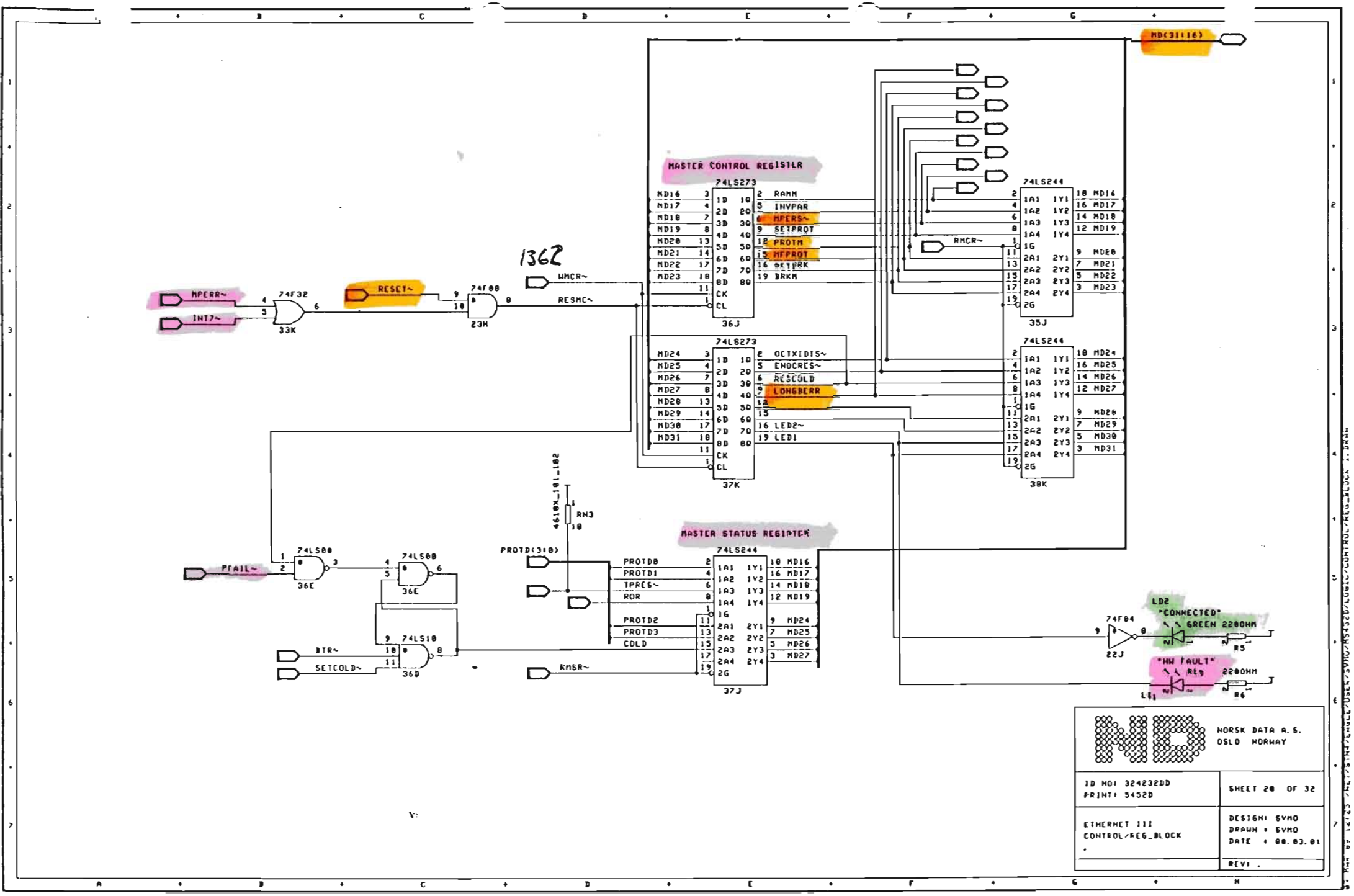

Scanned by Jonny Oddene for Sintran Data © 2026

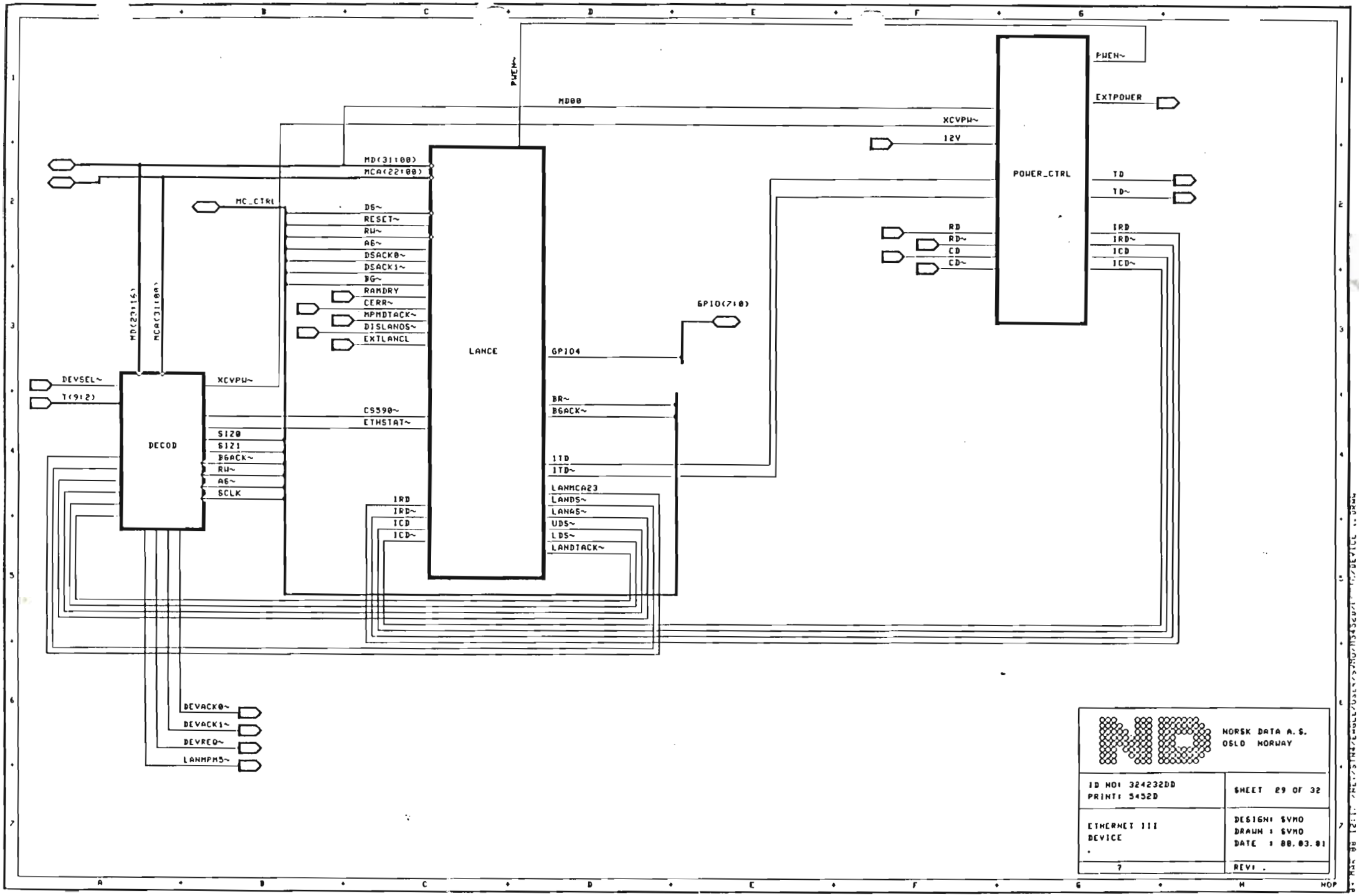

Scanned by Jonny Oddene for Sintran Data © 2026

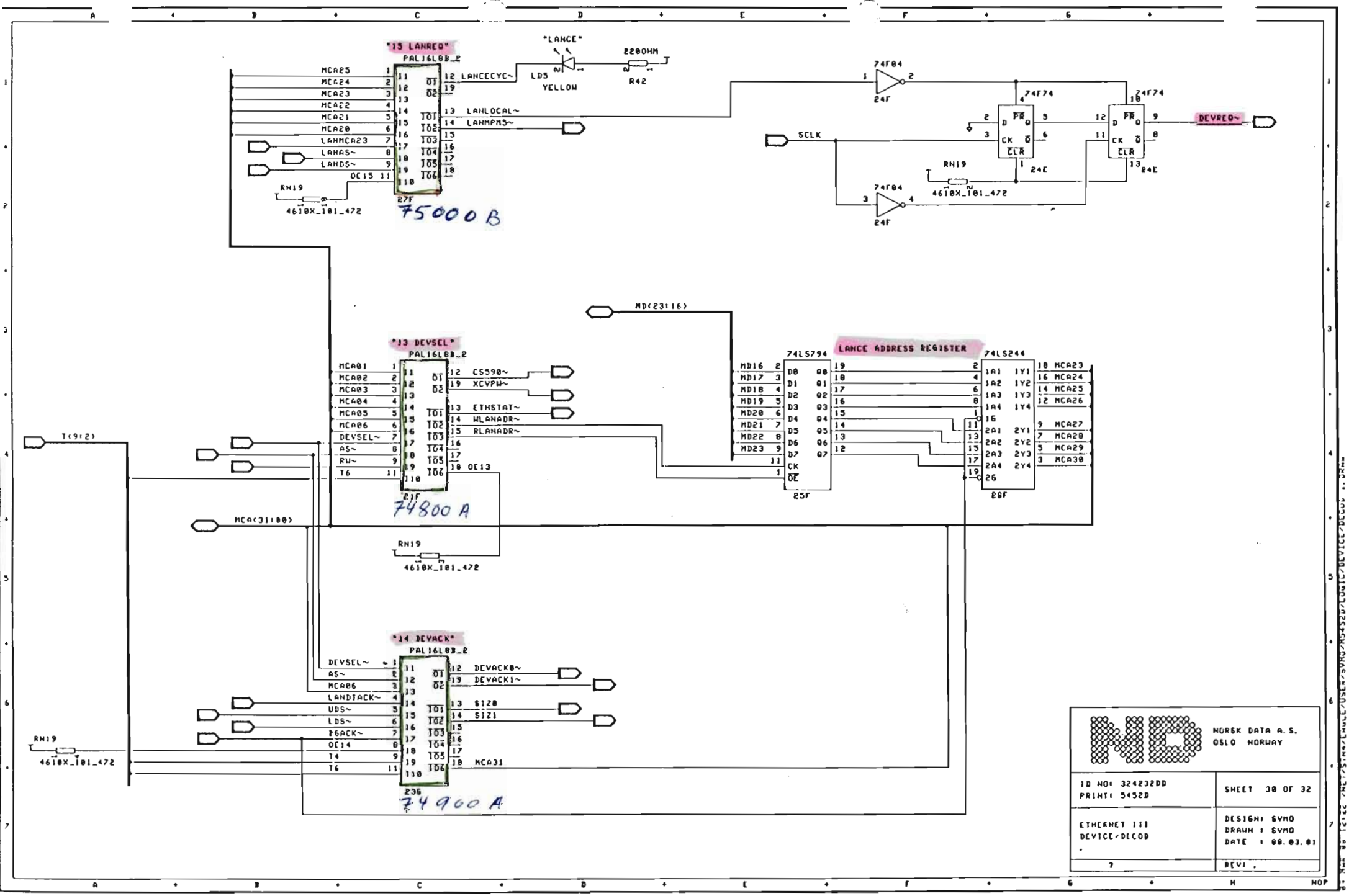

Scanned by Jonny Oddene for Sintran Data © 2026

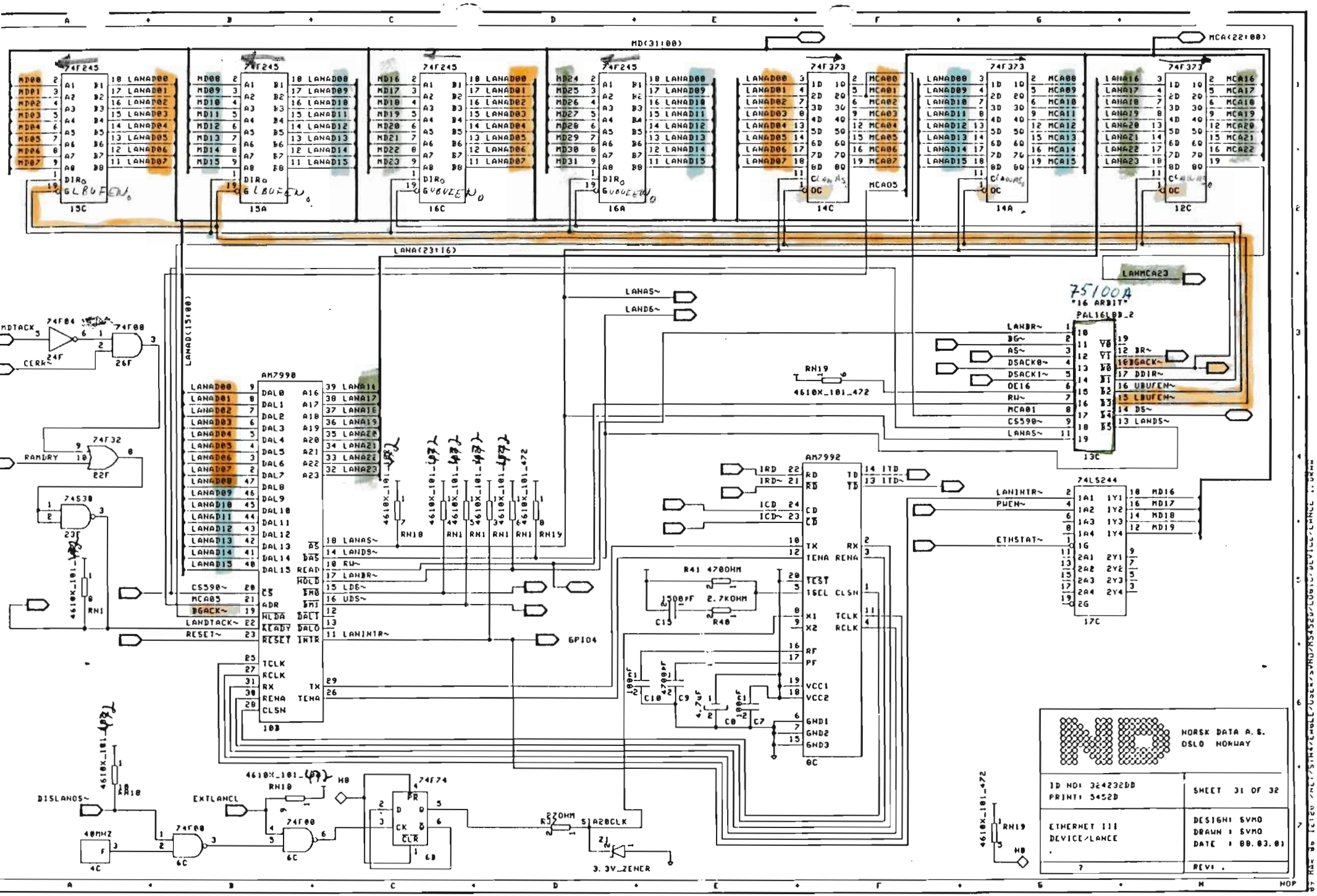

Scanned by Jonny Oddene for Sintran Data © 2026

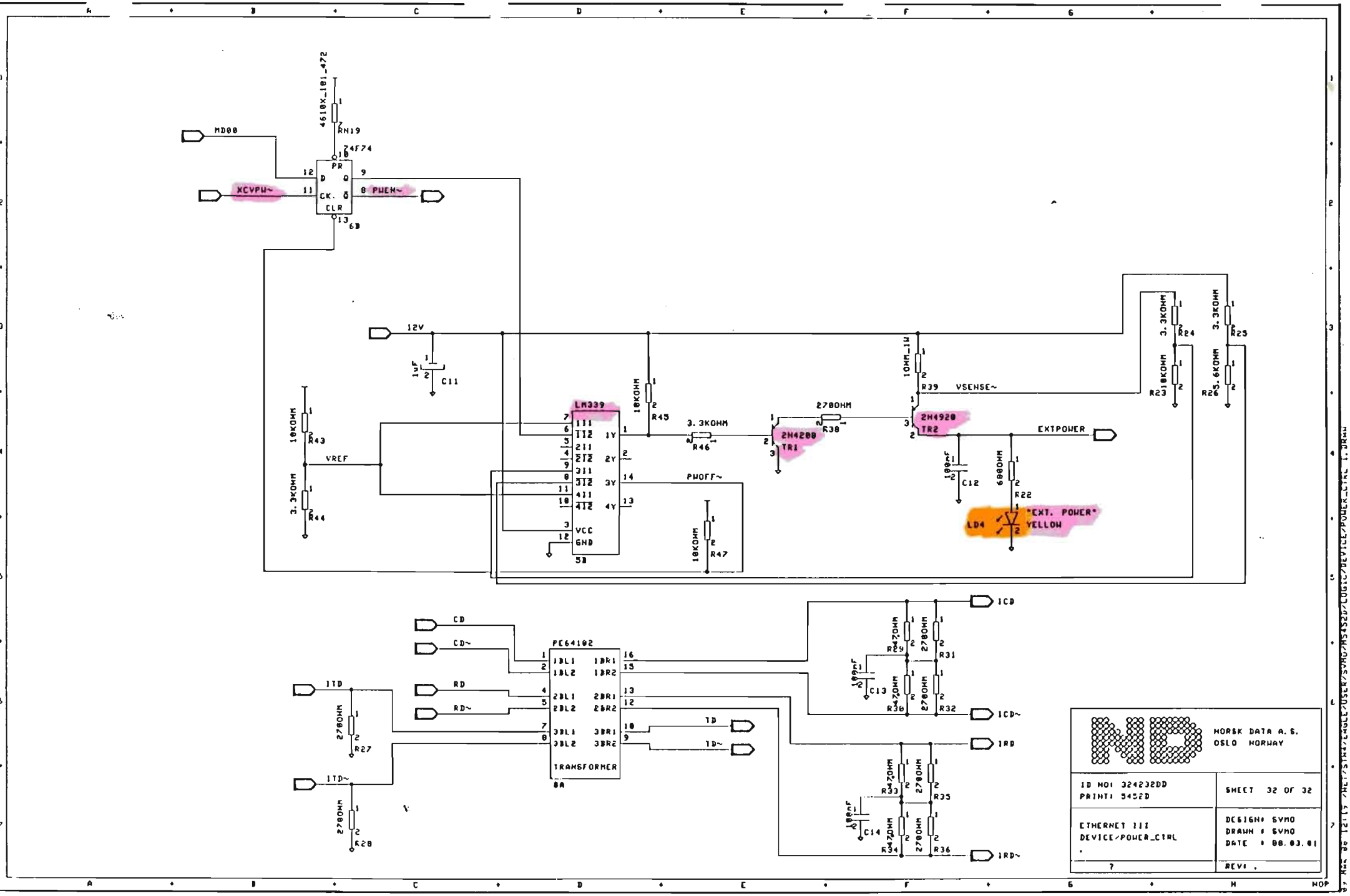

Scanned by Jonny Oddene for Sintran Data © 2026