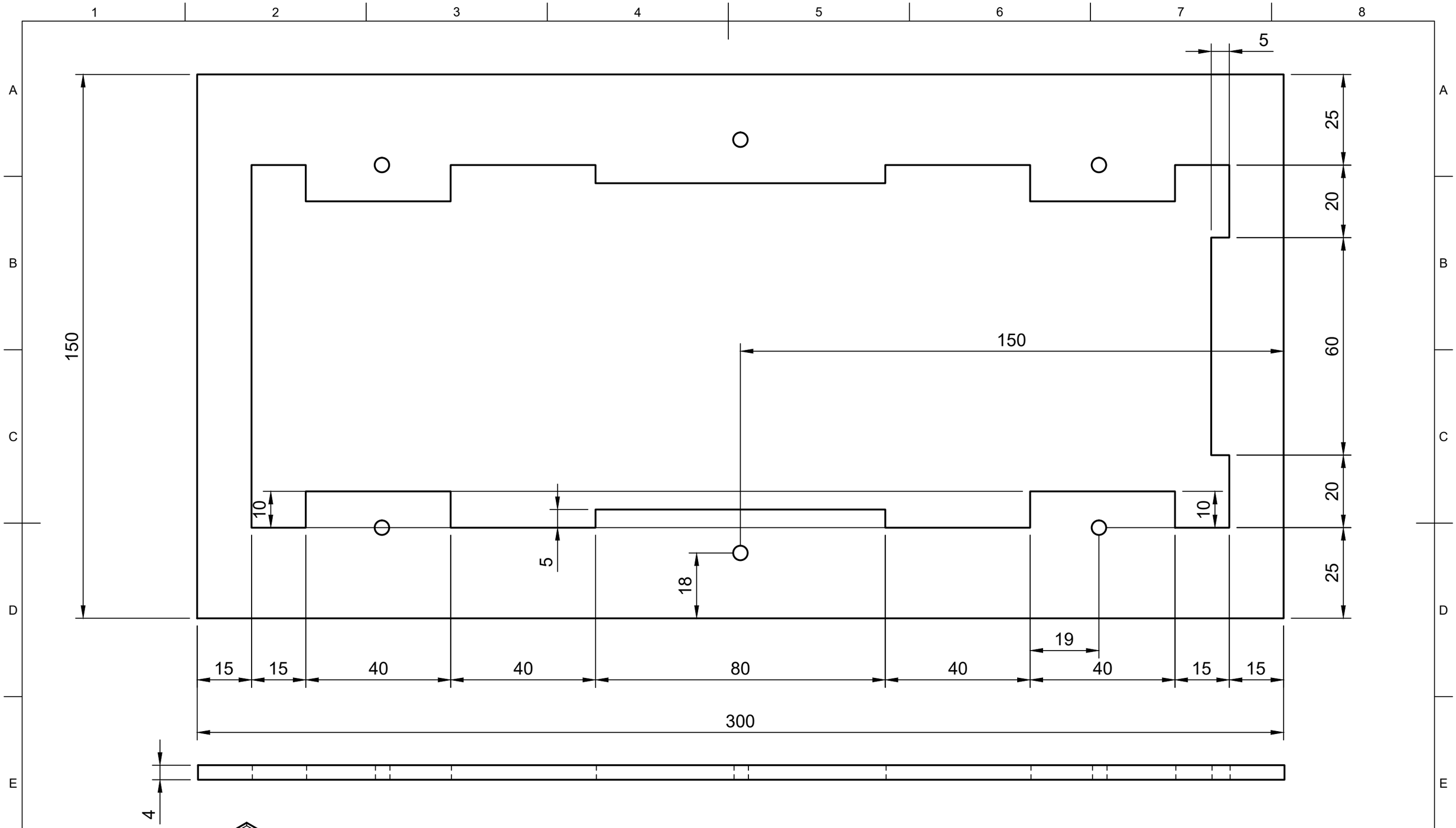

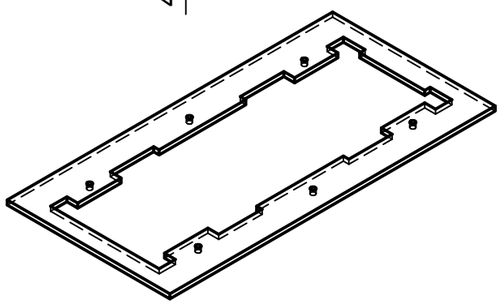

Dept.	Technical reference	Created by	Approved by
CEG	NIL	Jonathan Ong 4/10/2024	JONATHAN ONG 4/10/2024
		Document type: DRAWING (DRAFT)	Document status: COMPLETE
		Title: TOP PLATE	DWG No.: TOP_PLATE_01
			Rev. 01 / Date of issue 4/10/2024 / Sheet 1/1