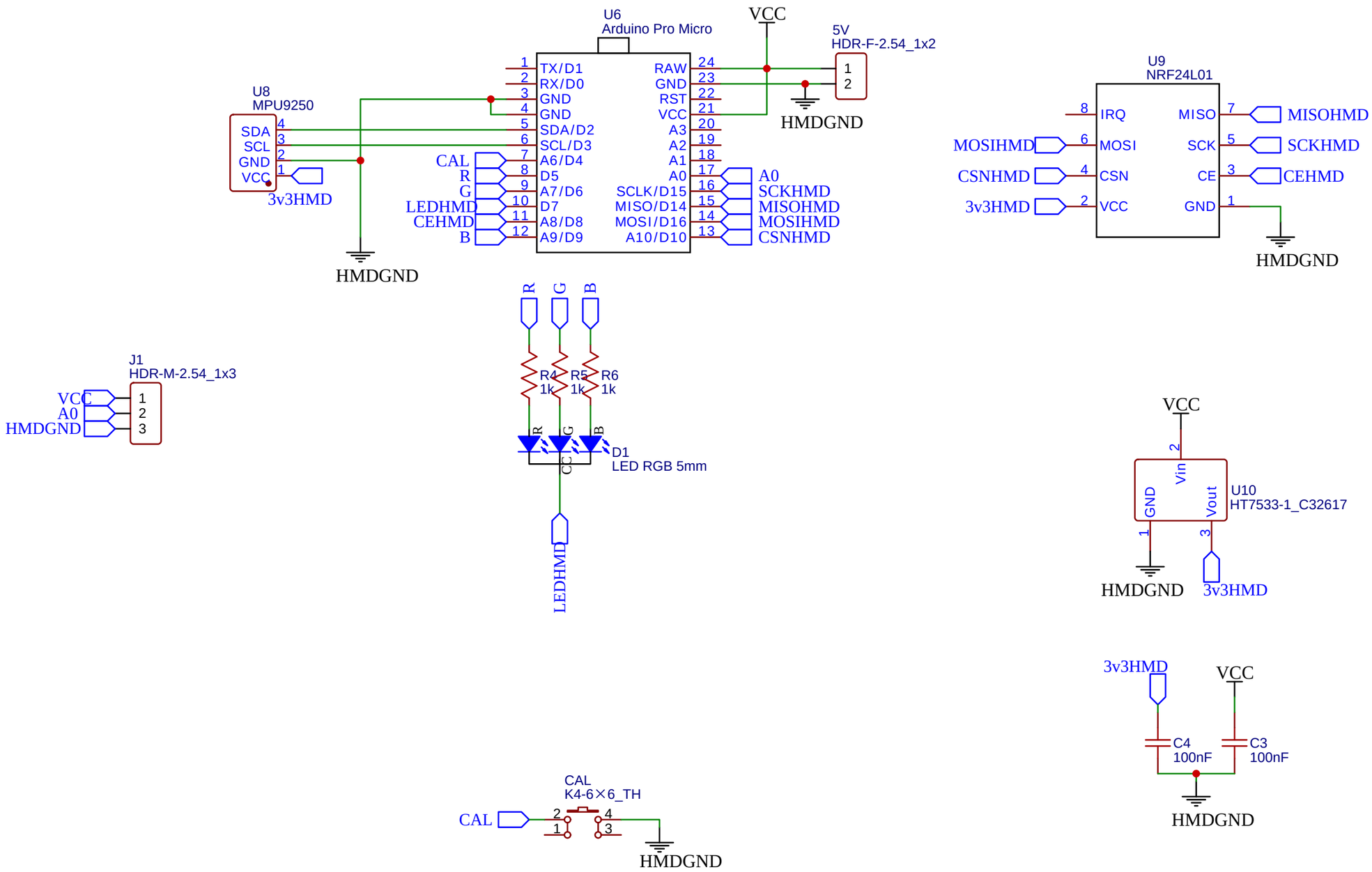

TITLE: HMD		REV: 1.1
EasyEDA	Company: HadesVR	Sheet: 1/1
	Date: 2021-04-28 Drawn By: LiquidCGS	