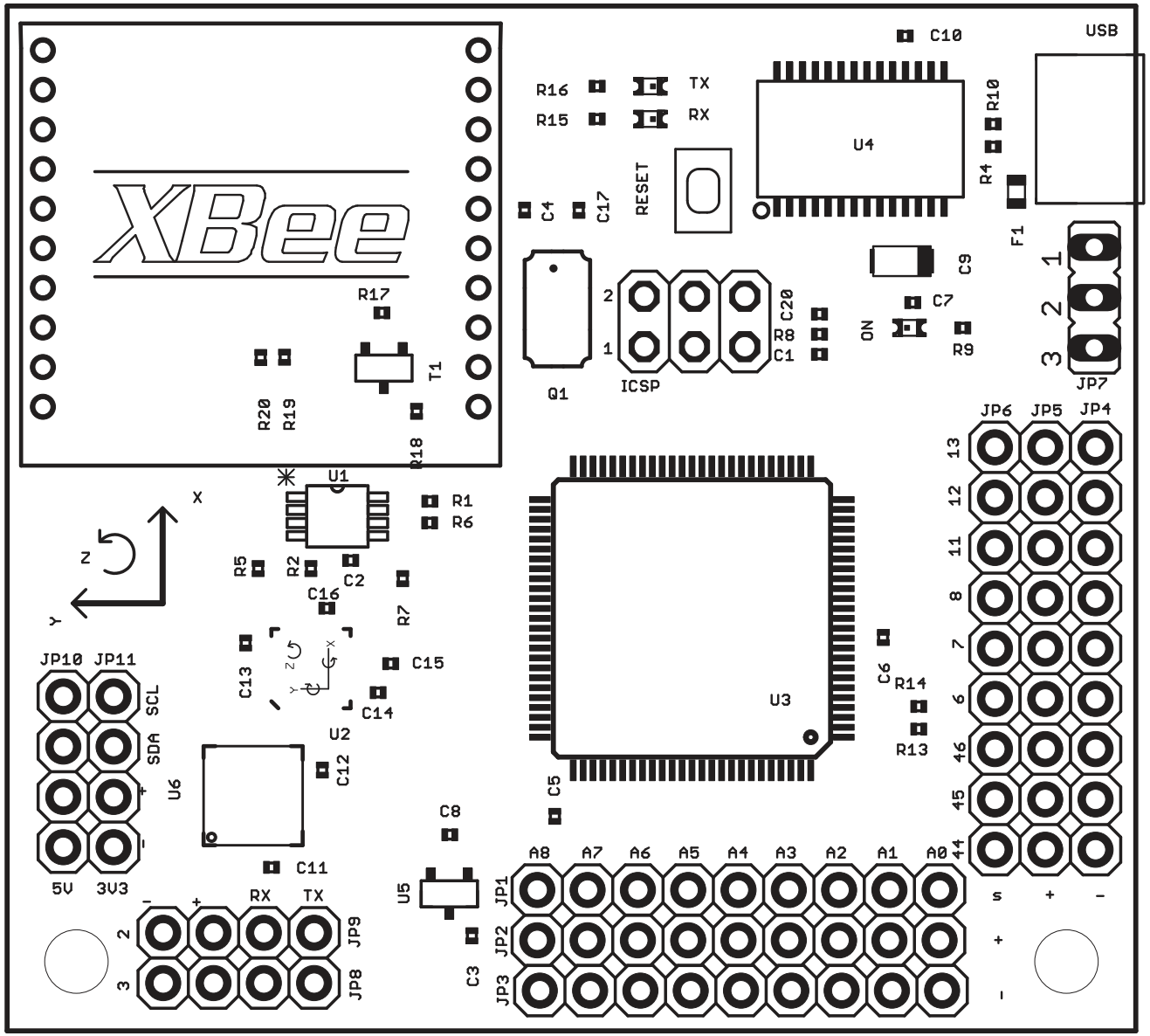
XBee
R17
T1
R20
R19
R18
U1
X
Z
Y
R1
R6
R5
R2
C2
C16
R7
C13
C15
C14
U2
C12
U6
C11
JP10
JP11
SCL
SDA
5V
3V3
RX
TX
JP9
JP8
C8
U5
C3
JP1
JP2
JP3
A8
A7
A6
A5
A4
A3
A2
A1
A0
C5
U3
C6
R14
R13
JP6
JP5
JP4
13
12
11
8
7
6
46
45
44
S
+
-
R16
R15
TX
RX
RESET
C4
C17
Q1
ICSP
C20
R8
C1
U4
C10
R10
R4
F1
USB
C9
C7
ON
R9
JP7
1
2
3

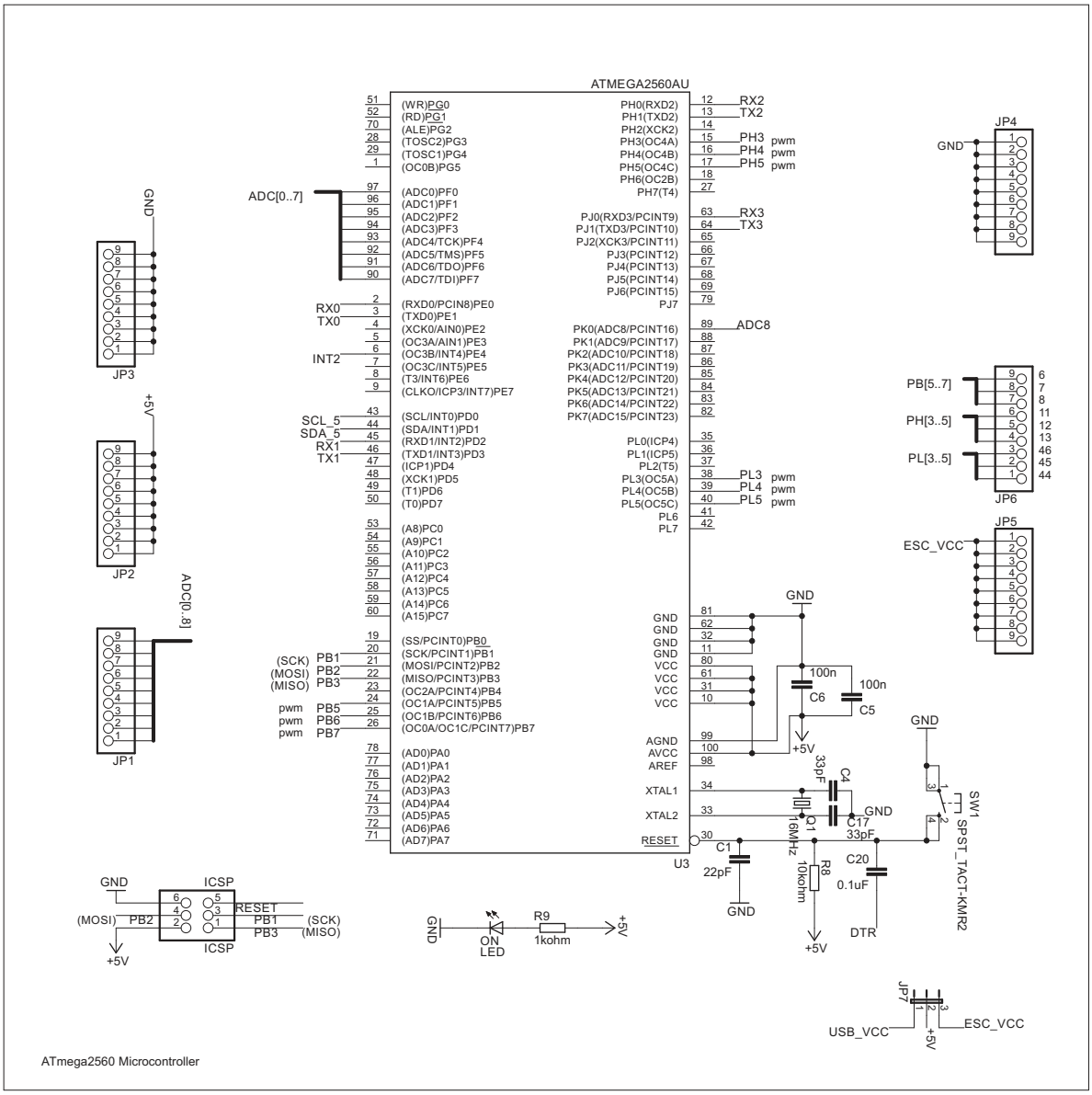

ATmega2560 Microcontroller

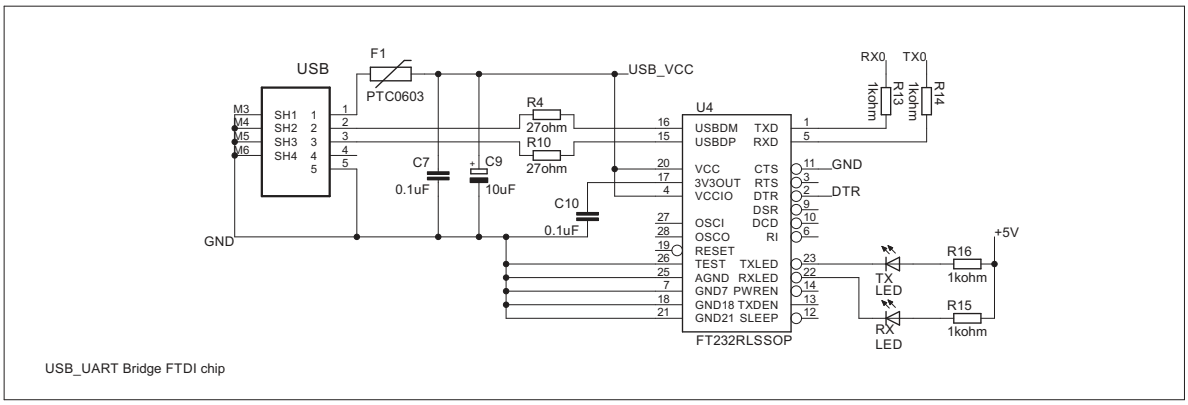

USB_UART Bridge FTDI chip

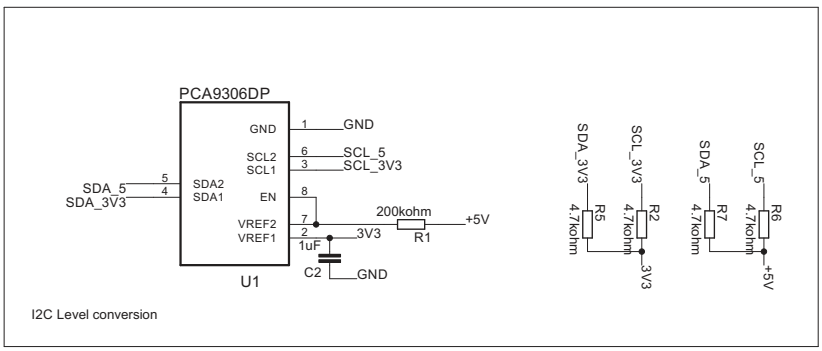

I2C Level conversion

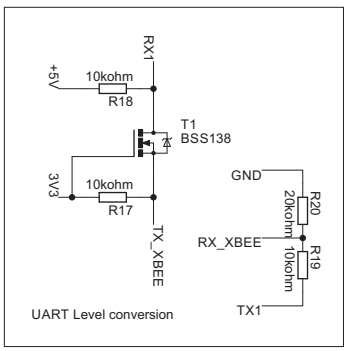

UART Level conversion

Title: Breeze UAV
Version: 1.0
11/03/2015 14:59:02
Drawn By: Mario Avila
1/2

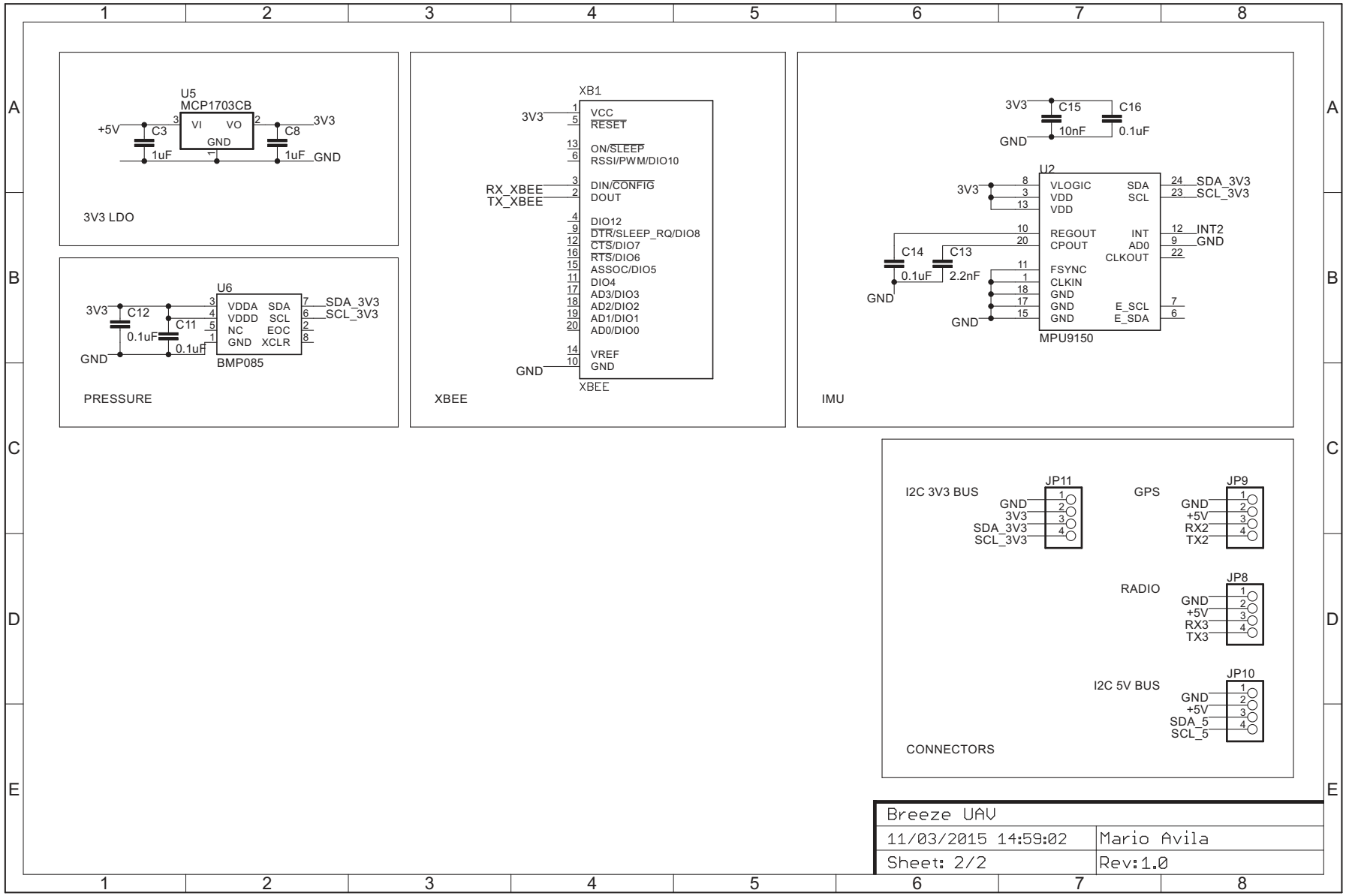
U5
MCP1703CB
+5V
C3
1uF
VI
VO
GND
C8
1uF
3V3
GND
3V3 LDO
U6
3V3
C12
0.1uF
C11
0.1uF
GND
VDDA
VDDD
NC
GND
SDA
SCL
EOC
XCLR
SDA_3V3
SCL_3V3
BMP085
PRESSURE
XB1
3V3
VCC
RESET
ON/SLEEP
RSSI/PWM/DIO10
RX_XBEE
TX_XBEE
DIN/CONFIG
DOUT
DIO12
DTR/SLEEP_RQ/DIO8
CTS/DIO7
RTS/DIO6
ASSOC/DIO5
DIO4
AD3/DIO3
AD2/DIO2
AD1/DIO1
AD0/DIO0
VREF
GND
GND
XBEE
XBEE
3V3
C15
10nF
C16
0.1uF
GND
U2
3V3
VLOGIC
VDD
VDD
REGOUT
CPOUT
FSYNC
CLKIN
GND
GND
GND
SDA
SCL
INT
AD0
CLKOUT
E_SCL
E_SDA
SDA_3V3
SCL_3V3
INT2
GND
C14
0.1uF
C13
2.2nF
GND
GND
MPU9150
IMU
I2C 3V3 BUS
JP11
GND
3V3
SDA_3V3
SCL_3V3
GPS
JP9
GND
+5V
RX2
TX2
RADIO
JP8
GND
+5V
RX3
TX3
I2C 5V BUS
JP10
GND
+5V
SDA_5
SCL_5
CONNECTORS
Breeze UAV
11/03/2015 14:59:02
Mario Avila
Sheet: 2/2
Rev:1.0