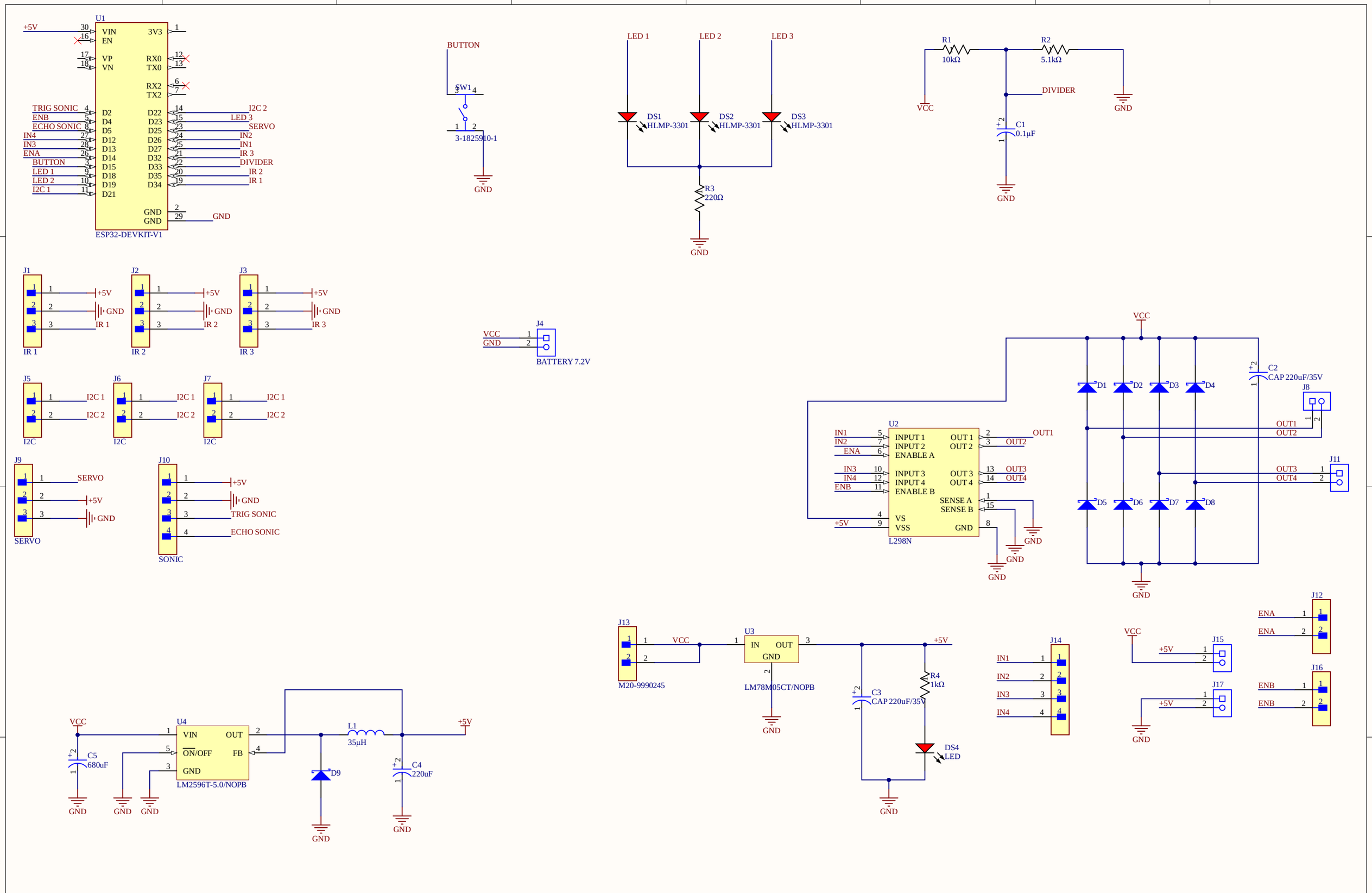

Title		
Size A3	Number	Revision
Date: 5/15/2025		Sheet of
File: C:\Users\..\Car.SchDoc		Drawn By: