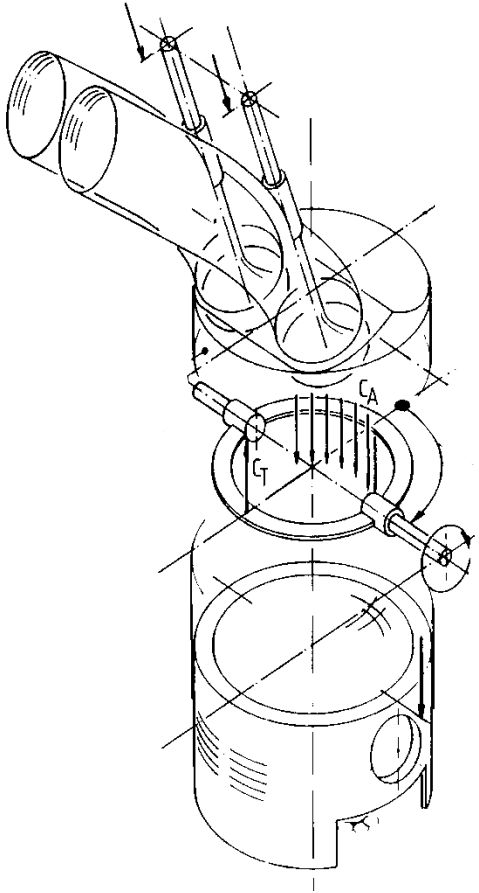

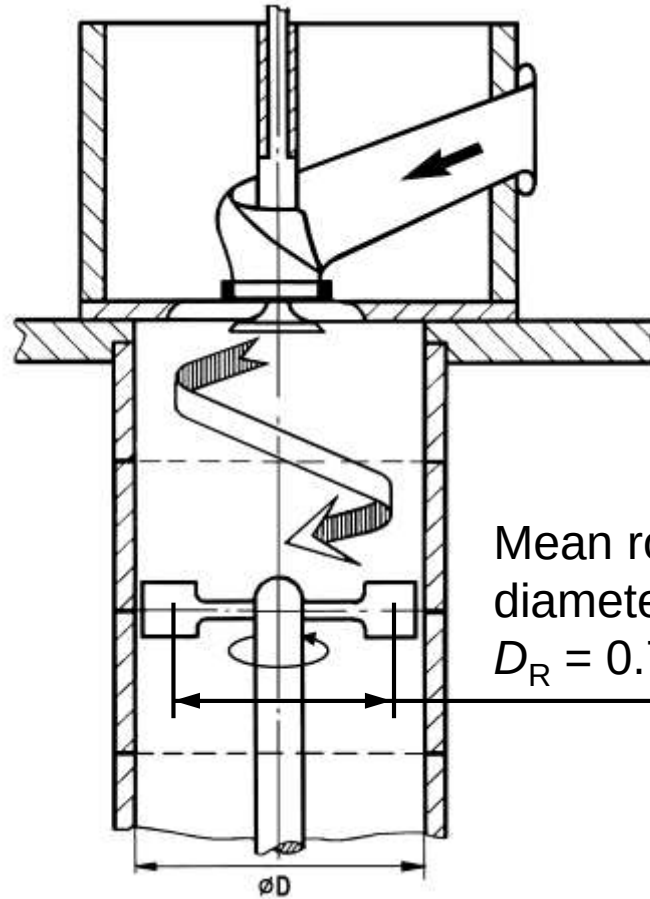

Mean rotor diameter:
$D_R = 0.7275 \cdot D$