Danmarks
Tekniske
Universitet

IC 2 OpAmp Design

Integreated analog electronics 2(34655)

Author

Hákon Hlynsson - s225765
Jonas Rose Lund Pedersen - s225269
Filip Ustrobinski - s256884
Pawas Swain - s250680

February 27, 2026

Contents

1 Introduction **1**

2 Requirements **1**

3 Design **3**

4 Simulation **6**

5 Conclusions **8**

6 Appendix **12**

References **13**

1 Introduction

In the following report, we will go through the requirements, design, and simulation of a two-stage operational amplifier configured for a non-inverting feedback. To understand the individual contributions throughout the project, the table below shows each members contribution to the design, simulation, and report.

	Hákon Hlynsson	Jonas Pedersen	Filip Ustrobinski	Pawas Swain
Design	x		x	x
Simulation	x		x	x
Report	x	x	x	x

Table 1: Contribution table

2 Requirements

In this assignment, we have been tasked with creating a two-stage operational amplifier configured for non-inverting feedback. To assist us, we were provided with the following schematic, which illustrates the circuit's configuration and internal architecture.

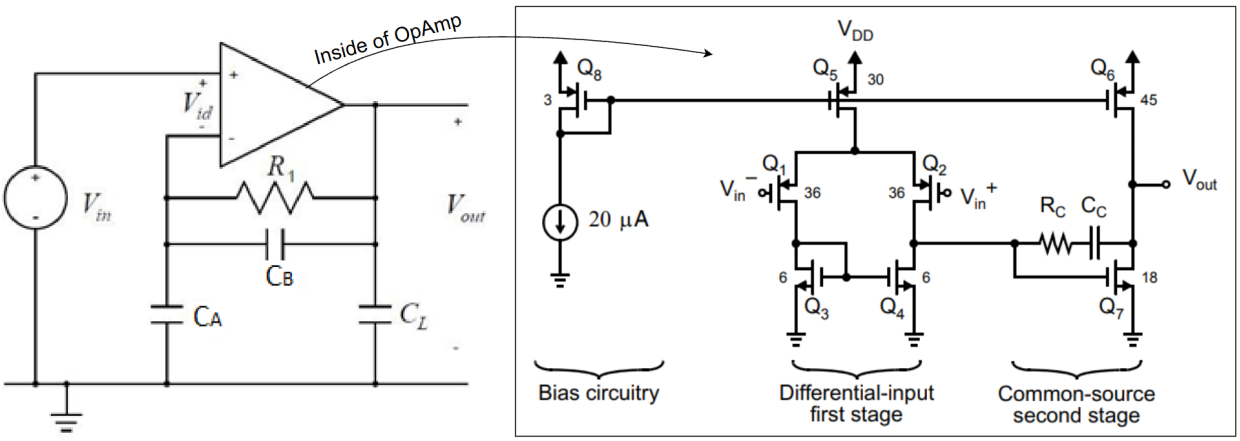

Figure 1: Two-stage operational amplifier configured for non-inverting feedback, including its internal architecture.

Other than the schematic, we were also given the following component values

$$V_{\mathrm{IN}} = 1.8\,\mathrm{V}, \quad C_A = C_B = 1\,\mathrm{pF}, \quad R_1 = 10^9\,\Omega, \quad C_L = 1.5\,\mathrm{pF}$$

In addition to the non-inverting amplifier with feedback must adhere to the following design requirements:

- Gain in mid band $\frac{Vout}{Vin} = 2$
- Bandwith(closed loop): $\omega_t = 2\pi \times 20 \times 10^6\ \mathrm{s}^{-1}$

- Slew rate: $SR \geq 30$ V/μs
- Phase margin: $PM \geq 70°$

To design this circuit, we will use a 0.18 μm CMOS process. The specific parameters for the transistors are listed in the table below

Technology	**0.18 μm**	
	NMOS	**PMOS**
μC_{ox} [μA/V^2]	270	70
V_{t0} [V]	0.45	-0.45
$\lambda \cdot L$ [μm/V]	0.08	0.08

The values used in the table, along with other parameters, were found in the textbook and can be found in the appendix.

In addition, we are allowed to insert a resistor (or transistor) in series with the compensation capacitor, a so called lead compensation.

Throughout the project, it will be assumed that the V_{eff} for Q_5 and Q_6 is 200 mV, and that all the transistors have a length of 1 μm.

3 Design

In the following section, we will go through the design of the OpAmp to ensure it fulfills all the specified requirements. To help desing the OpAmp, we used methods explained in the books by Tony Chan Carusone and Erik Bruun.

The first thing we did when analyzing the circuit was calculate the feedback factor (β) for the OpAmp. Looking at the schematic, it can be seen that the only three components providing feedback are R_1, C_A, and C_B. However, since R_1 is extremely large and is inserted primarily to define the DC quiescent voltage, it can be ignored. We can therefore calculate β using a voltage divider, as shown below.

$$\beta = \frac{\frac{1}{sC_A}}{\frac{1}{sC_A} + \frac{1}{sC_B}} = \frac{C_A}{C_A + C_B} = \frac{1pF}{2pF} = \frac{1}{2}$$

We will set the feedback factor (β) aside for later use. Next, we need to determine the location of the OpAmp second pole. To do this, we use the following equation describing the phase margin.

$$\text{PM} = 180° - 90° - \arctan\left(\frac{\omega_t}{\omega_z}\right) - \arctan\left(\frac{\omega_t}{\omega_{p2}}\right) = 90° - \arctan\left(\frac{\omega_t}{\omega_z}\right) - \arctan\left(\frac{\omega_t}{\omega_{p2}}\right)$$

Since the OpAmp has the following requirements

$$PM = 70°, \quad \omega_t = 40 * \pi * 10^6, \quad \omega_z = 10 * \omega_t$$

We can therefore isolate the expression to find the pole

$$\omega_{p2} = -\frac{\omega_t}{\tan\left(PM - 90° + \arctan\left(\frac{\omega_t}{\omega_z}\right)\right)} = 493.37 * 10^6 \frac{rad}{s}$$

We will save this value for later and instead determine the relationship between gm_1 and gm_7. To do this, we will use the following equation.

$$\frac{\omega_z}{\omega_{t1}} = \left(\frac{g_{m7}}{C_c}\right)\left(\frac{C_c}{\beta g_{m1}}\right) = \left(\frac{1}{\beta}\right)\left(\frac{g_{m7}}{g_{m1}}\right) = 10 \Rightarrow g_{m7} = 5g_{m1}$$

From the equation, we can establish that $g_{m7} = 5 \cdot g_{m1}$. We will save this relationship for later and calculate the overall capacitance, neglecting the parasitic capacitances created by the transistors. Because C_L is in parallel with the series combination of C_A and C_B, the total capacitance can be found using the following equation.

$$C_{total} = C_L + \frac{C_A \cdot C_B}{C_A + C_B} = 2pF$$

Therefore, the total capacitance of the system is 2 pF. We can now combine all the previously

derived variables using the following equation to calculate the Miller capacitance of the system.

$$\frac{\omega_{p2}}{\omega_t} = \left(\frac{gm_7}{C_{total}}\right) \cdot \left(\frac{C_C}{\beta \cdot gm_1}\right) \Leftrightarrow C_C = \frac{\omega_{p2} \cdot \beta \cdot gm_1 \cdot C_{total}}{\omega_t \cdot gm_7} = \frac{\omega_{p2} \cdot \beta \cdot C_{total}}{5 \cdot \omega_t} = 0.785 \text{ pF}$$

Therefore, the Miller capacitance is $C_C = 0.785$ pF. We can use this value to calculate the transconductance using the following equation.

$$\omega_t = \frac{\beta \cdot gm_1}{C_C} \Leftrightarrow gm_1 = \frac{\omega_t \cdot C_C}{\beta} = 197.37\mu S$$

Therefore, the transconductance is $g_{m1} = 197.37$ μS. Given that the ratio between g_{m7} and g_{m1} is $g_{m7} = 5 \cdot g_{m1}$, g_{m7} can be calculated by following
:

$$g_{m7} = 5 \cdot g_{m1} = 5 \cdot 197.37 \ \mu\text{S} = 986.85 \ \mu\text{S}$$

Now that we have determined $g_{m7} = 986.85$ μS, we will calculate the current flowing through transistor Q5. Given the minimum slew rate requirement, we can use the following equation

$$I_{d5} = SR_{min} \cdot C_C = 23.56 \ \mu\text{A}$$

Therefore, to achieve a slew rate of $30\frac{\text{V}}{\mu\text{s}}$, we need a minimum current of 23.56 μA through Q5. We can also determine the current through transistor Q6 using the following equation

$$I_{d6} = SR_{min} \cdot (C_C + C_{total}) = 83.56 \ \mu\text{A}$$

With currents I_{d5} and I_{d6} determined, we can find the remaining currents in the system. Because an equal amount of current must flow through each side of the differential stage, we can establish those branch currents. Furthermore, the current I_{d6} must equal I_{d7},because it is in series. Therefore, the following can be stated

$$I_{D1} = I_{D2} = I_{d3} = I_{d4} = \frac{I_{d5}}{2} = 11.78\mu A \quad and \quad I_{D6} = I_{D7} = 83.56\mu A$$

Now that all the currents throughout the system are known, we can calculate the transistor widths. The width of transistor Q1 can be found using the following equation

$$g_{m1} = \sqrt{2\mu C_{ox}\frac{W_1}{L}I_{D1}} \ \Rightarrow \ W_1 = \frac{g_{m1}^2 L}{2I_{D1}\mu C_{ox}} = \frac{(197.35\mu S)^2 \cdot 1\mu m}{2 \cdot 11.78\mu A \cdot 70\frac{\mu A}{V^2}} = 23.62\mu m$$

Because Q1 and Q2 are part of a differential input stage, they must have the same width.

$$W_1 = W_2 = 23.62\mu m$$

We can now use the same equation as before to calculate the width of Q7 as seen below.

$$g_{m7} = \sqrt{2\mu C_{ox}\frac{W_7}{L}I_{D7}} \Rightarrow W_7 = \frac{g_{m7}^2 L}{2I_{D7}\mu C_{ox}} = \frac{(986.76\mu S)^2 \cdot 1\mu m}{2 \cdot 83.56\mu A \cdot 270\frac{\mu A}{V^2}} = 21.58\mu m$$

The widths of transistors Q5 and Q6 are calculated using the following equation :

$$I_{DX} = \frac{1}{2}\mu C_{ox}\frac{W_X}{L}(V_{effX})^2 \quad \Rightarrow \quad W_X = \frac{2 \cdot I_{DX} \cdot L}{\mu C_{ox}(V_{effX})^2}$$

Substituting the known parameters for the two transistors yields

$$W_5 = \frac{2 \cdot I_{D5} \cdot L}{\mu C_{ox} \cdot (V_{eff5})^2} = \frac{2 \cdot 23.56\ \mu\text{A} \cdot 1\ \mu\text{m}}{70\ \frac{\mu\text{A}}{\text{V}^2} \cdot (0.2\ \text{V})^2} = 16.83\ \mu\text{m}$$

$$W_6 = \frac{2 \cdot I_{D6} \cdot L}{\mu C_{ox} \cdot (V_{eff6})^2} = \frac{2 \cdot 83.56\ \mu\text{A} \cdot 1\ \mu\text{m}}{70\ \frac{\mu\text{A}}{\text{V}^2} \cdot (0.2\ \text{V})^2} = 59.69\ \mu\text{m}$$

We can now apply the scaling principle between transistors Q7 and Q4 to calculate the width of Q4

$$\frac{I_{d4}}{\left(\frac{w_4}{L}\right)} = \frac{I_{d7}}{\left(\frac{w_7}{L}\right)} \iff w_4 = \frac{I_{d4}\, w_7}{I_{d7}} = 3.04\mu m$$

But due to the configuration of the schematic we know that the width of Q3 and Q4 has to be the same. it can there be concluded that

$$w_3 = 3.04\mu m$$

We can apply the same method to calculate the width of transistor Q8, which is calculated using following.

$$\frac{I_{d5}}{\left(\frac{w_5}{L}\right)} = \frac{I_{d8}}{\left(\frac{w_8}{L}\right)} \iff w_8 = \frac{I_{d8}\, w_5}{I_{d5}} = 14.29\mu m$$

All the widths of the transistors have been sumurized in the following table.

	W1	W2	W3	W4	W5	W6	W7	W8
μm	23.62	23.62	3.04	3.04	16.83	59.69	21.59	14.29

4 Simulation

In the following section the design that has been created will be simulated, to simulate the circuit we use LTSpice and our configuration can be seen in the picture below.

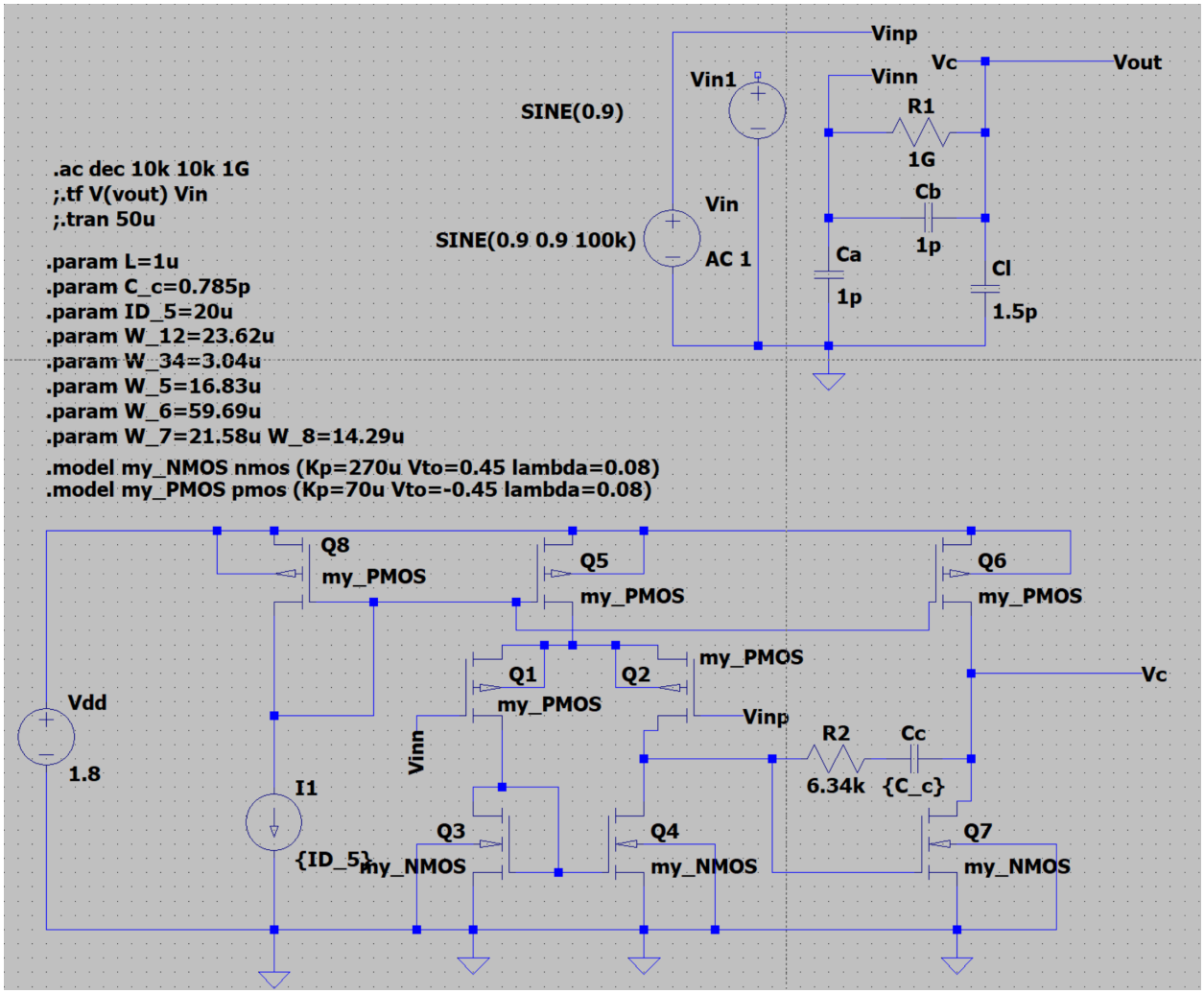

Figure 2: LT-Spice simulation of the initial circuit

Simulations will now be run on the circuit to verify that it meets the design requirements. The first simulation is a closed-loop test to confirm whether the circuit provides the desired midband gain of 2.

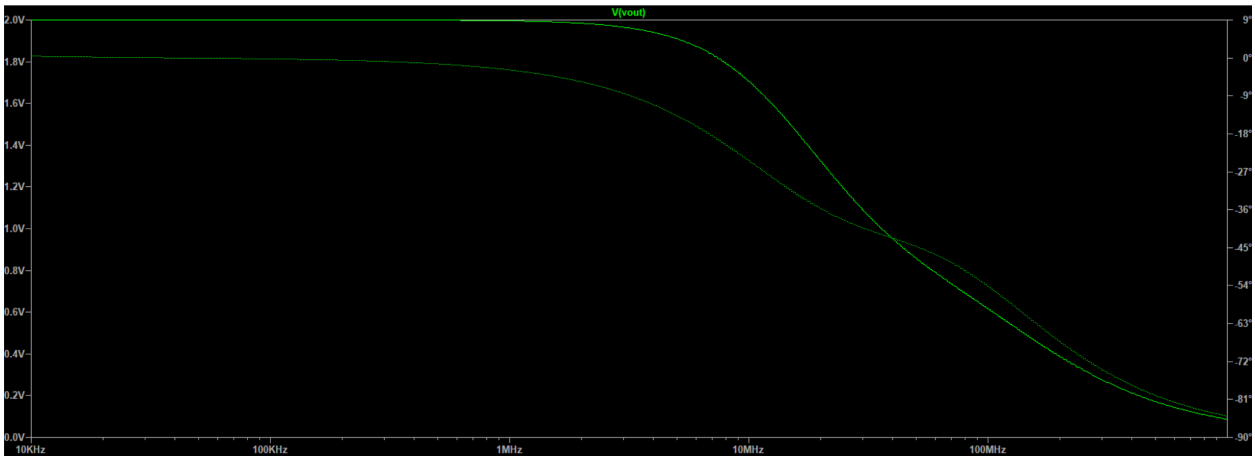

Figure 3: Close loop linear measurement

The simulation confirms that the midband gain is indeed 2. We can also change the y axis to a dB scale to verify that the pole is located at 20 MHz. The simulation plot is shown below

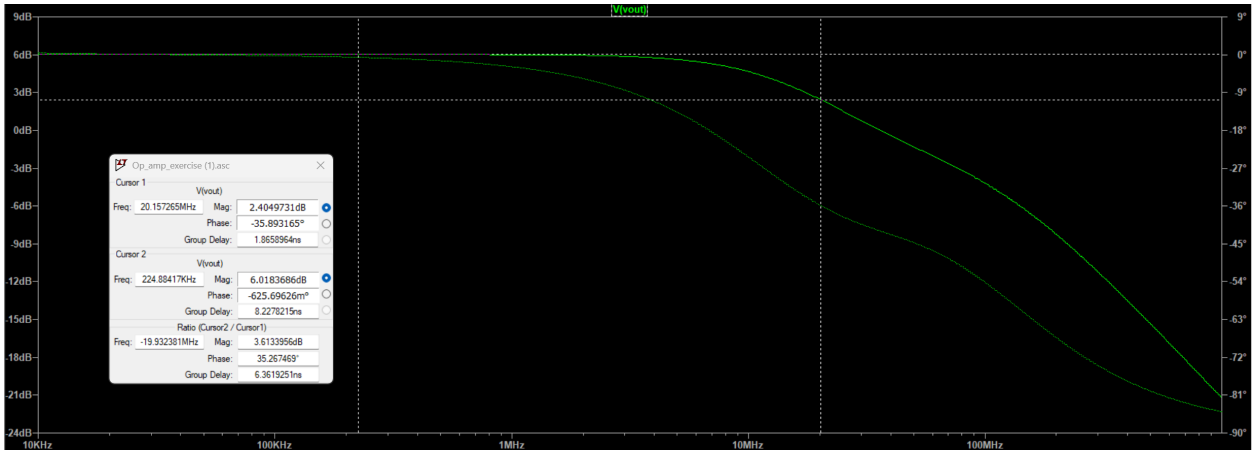

Figure 4: Close loop db measurement

The simulation shows that the pole is not exactly at 20 MHz, but is located at a slightly lower frequency. Next, we must verify that the slew rate exceeds 30 V/Âľs. To do this, the current through transistor Q5 was measured and found to be 24.02 ÂľA. Using this value, we can calculate the actual slew rate as follows

$$SR = \frac{I_{D5}}{C_c} => \frac{24.02 \times 10^{-6}}{0.785 \times 10^{-12}} = 30.59\frac{V}{us}$$

Having verified that the slew rate requirement is met, we can now check whether the phase margin exceeds 70°. To do this, we will simulate the open loop circuit, as shown below.

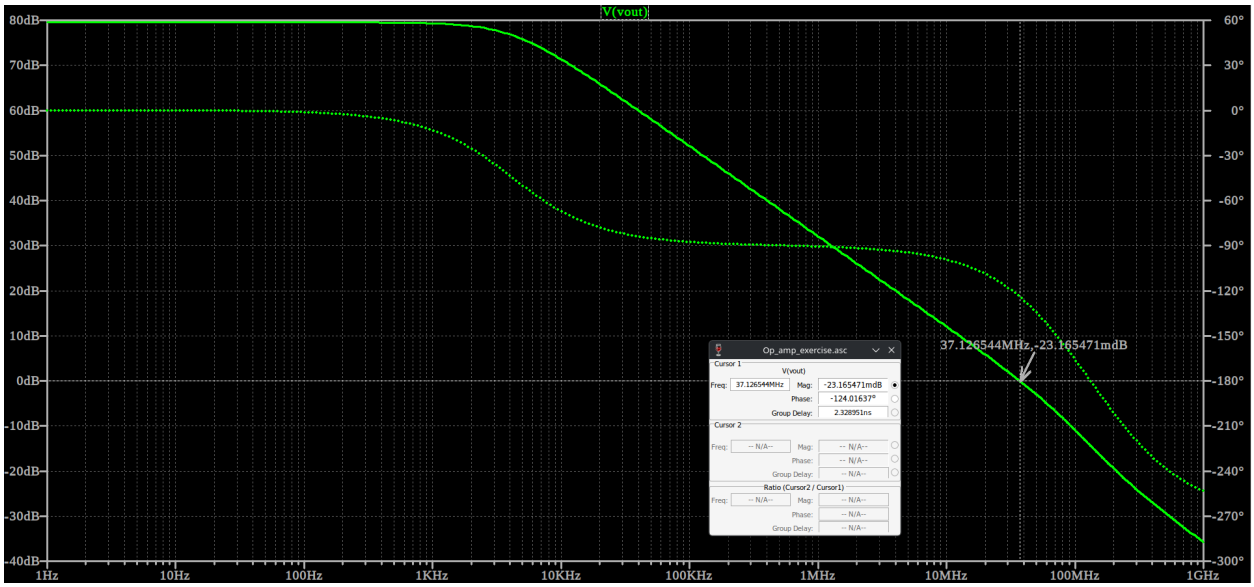

Figure 5: Open Loop Phase Margin initial circuit

The simulation shows that the phase margin is only 56°, which therefore does not fulfill the requirement of a phase margin greater than 70°.

5 Conclusions

In order to make the amplifier meet the requirements we decided to introduce the miller compensation resistor (R_c) and adjust the value of the existing compensation capacitor (C_c).
According to the steps from the book:

1. We started by choosing an initial compensation capacitor, C_c', somewhat arbitrarily:

$$C_c' \cong \left(\frac{\beta g_{m1}}{g_{m7}}\right) C_L$$

$$C_c' \cong 0.15pF$$

2. Using SPICE, we found the frequency at which the target phase shift exists ($-110°$ for a 70° phase margin). Afterwards we found the gain based on the requirement for the frequency of $20MHz$.

$$A' = 10^{\frac{5.79dB}{20}} \approx 1.95$$

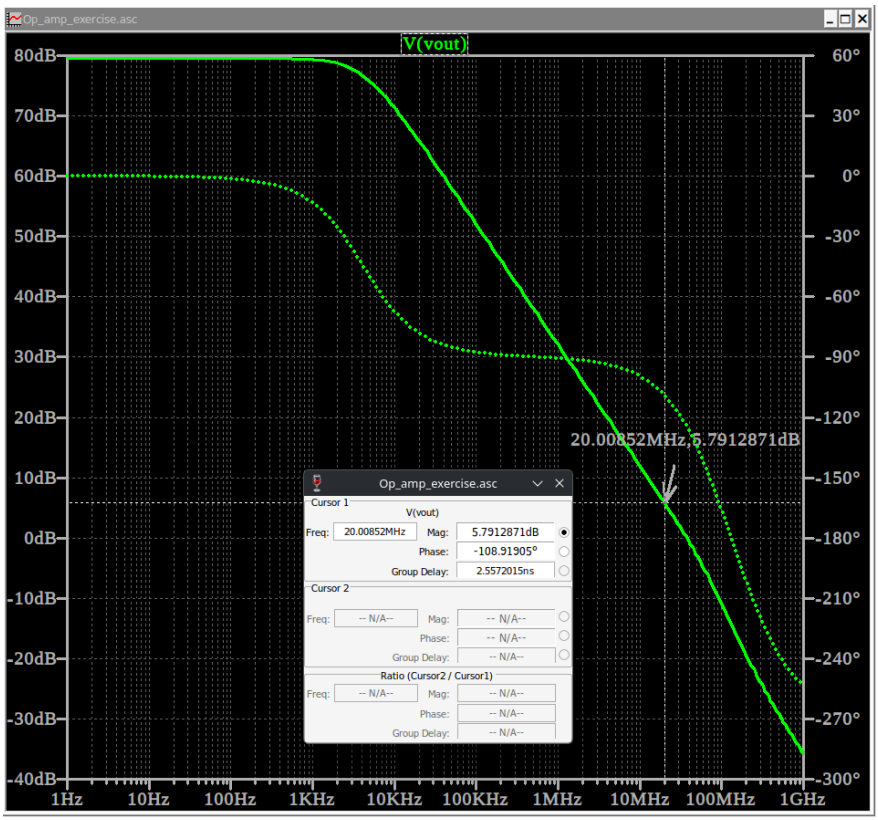

Figure 6: Choosing the linear gain based on the frequency requirement

3. We chose a new C_c so that ω_t becomes the unity-gain frequency of the loop gain. This can be achieved by calculating:

$$C_c = C_c' A'$$

$$C_c = 1.95 \times 0.15pF = 0.293pF$$

After multiple iterations we managed to adjust the value of C_c to match the f_{-3db} frequency to $\approx 20MHz$. This value was found to be $\approx 1.095pF$

4. Lastly based on the new value of the C_c we chose the nulling resistor R_c according to:

$$R_c = \frac{1}{1.7\omega_t C_c}$$

$$R_c = \frac{1}{1.7 \times 20MHz \times 1.095pF} \approx 4.27\text{k}\Omega$$

Now we can perform the final requirements check. It is also necessary to mention that value for C_c was adjusted to match the required for closed loop bandwidth was therefore changed to $0.748pF$. According to both Fig. 7 and Fig. 8 requirements for gain, phase margin and bandwidth are satisfied.

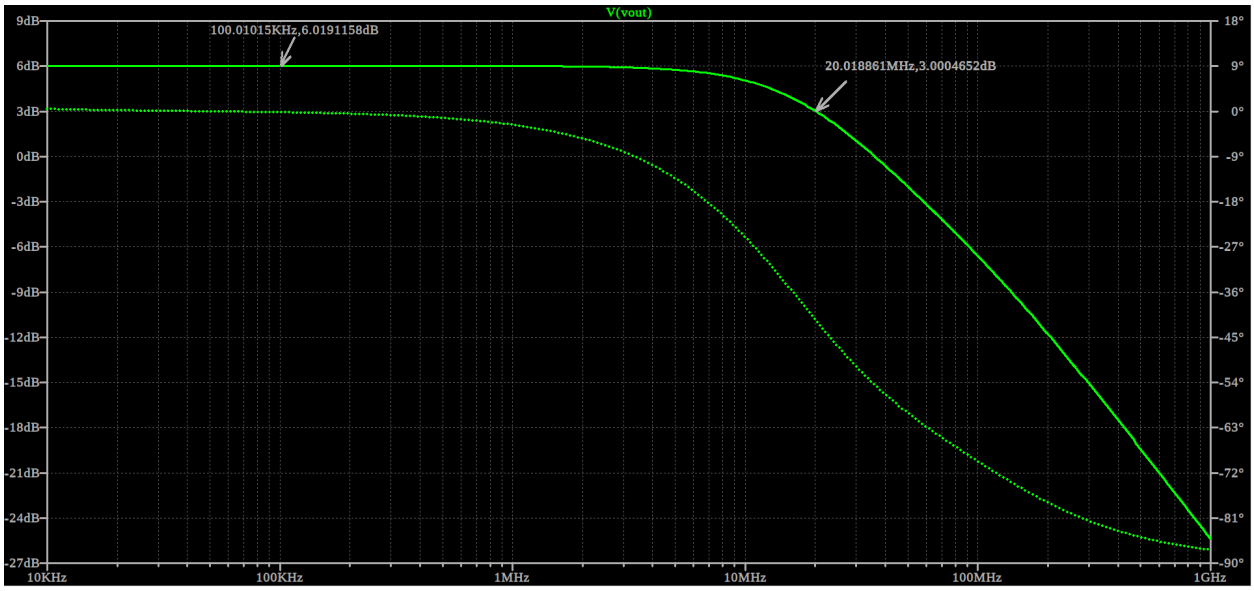

Figure 7: Closed loop gain and bandwidth

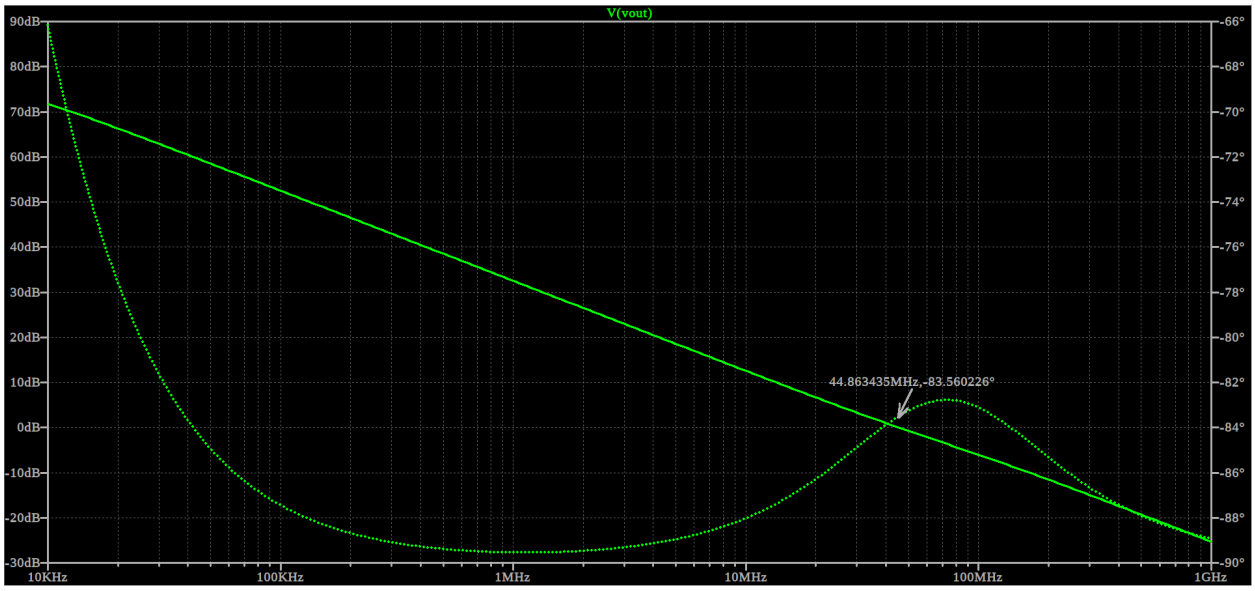

Figure 8: Open loop phase margin

Midband closed loop gain satisfied:

$$A_{cl} = 10^{\frac{6dB}{20}} \approx 2$$

Finally the slew rate requirement is also satisfied as:

$$SR = \frac{I_{D5}}{C_c} = \frac{23.56uA}{0.748pF} \approx 31.15\frac{V}{us}$$

which concludes the exercise.

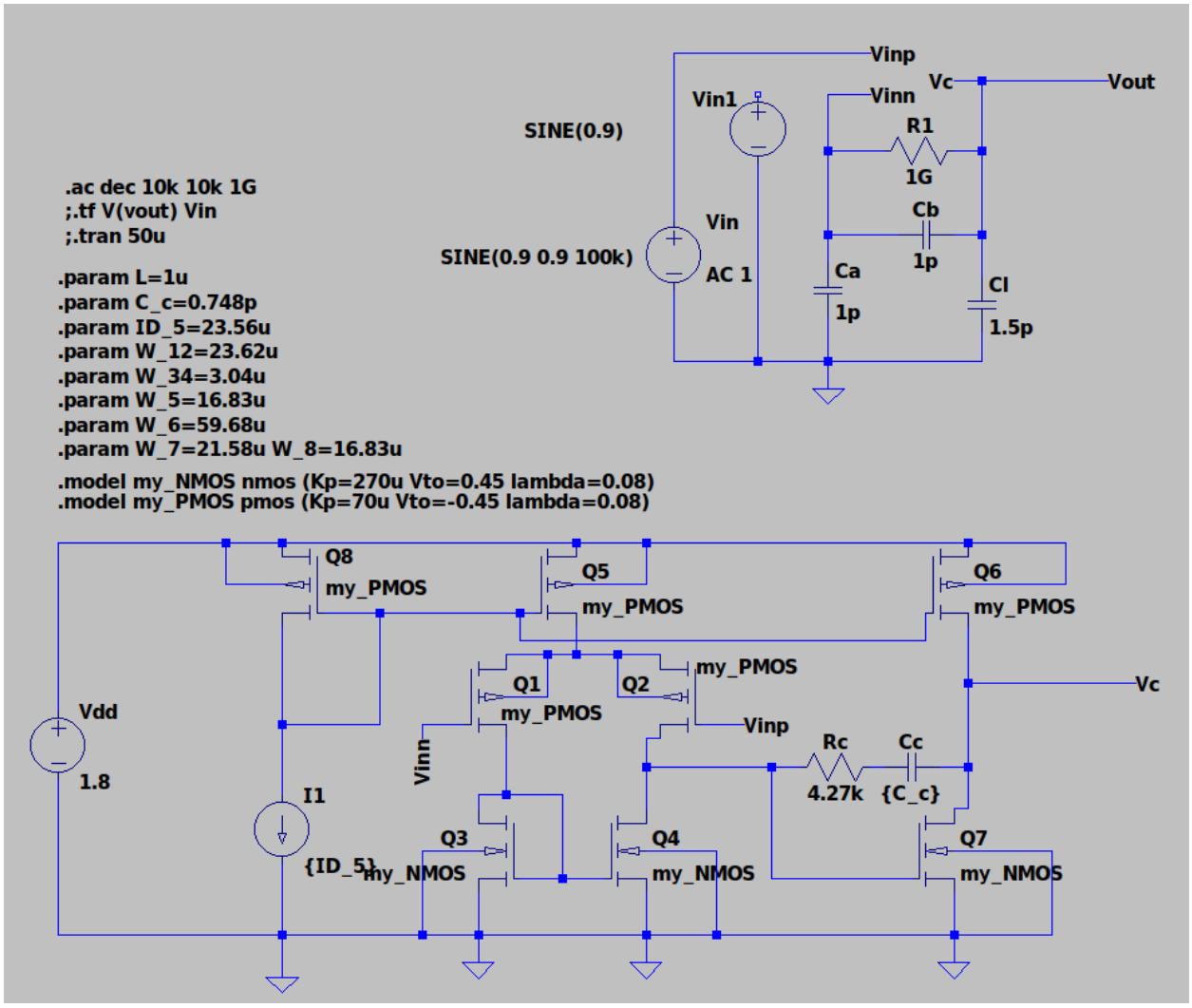

Figure 9: Final spice circuit

6 Appendix

Table 1.5 MOSFET parameters representative of various CMOS technologies and used for rough hand calculations in this text.

	0.8 μm		0.35 μm		0.18 μm		45 nm	
Technology	NMOS	PMOS	NMOS	PMOS	NMOS	PMOS	NMOS	PMOS
μC_{ox} ($\mu A/V^2$)	92	30	190	55	270	70	280	70
V_{t0} (V)	0.80	–0.90	0.57	–0.71	0.45	–0.45	0.45	–0.45
$\lambda \cdot L$ (μm/V)	0.12	0.08	0.16	0.16	0.08	0.08	0.10	0.15
C_{ox} ($fF/\mu m^2$)	1.8	1.8	4.5	4.5	8.5	8.5	25	25
t_{ox} (nm)	18	18	8	8	5	5	1.2	1.2
n	1.5	1.5	1.8	1.7	1.6	1.7	1.85	1.85
θ (1/V)	0.06	0.135	1.5	1.0	1.7	1.0	2.3	2.0
m	1.0	1.0	1.8	1.8	1.6	2.4	3.0	3.0
$C_{ov}/W = L_{ov}C_{ox}$ (fF/μm)	0.20	0.20	0.20	0.20	0.35	0.35	0.50	0.50
$C_{db}/W \approx C_{sb}/W$ (fF/μm)	0.50	0.80	0.75	1.10	0.50	0.55	0.45	0.50

Figure 10: Transient response of the amplifier

References

[1] Razavi, Behzad. *CMOS Analog IC Design Fundamentals*. Available at: https://backend.orbit.dtu.dk/ws/files/281854252/cmos_analog_ic_design_fundamentals.pdf.

[2] Tony Chan Carusone, David Johns, and Kenneth Martin. *Analog Integrated Circuit Design*. Available at: https://picture.iczhiku.com/resource/eetop/WhiRhElYtZOwJBMc.pdf.