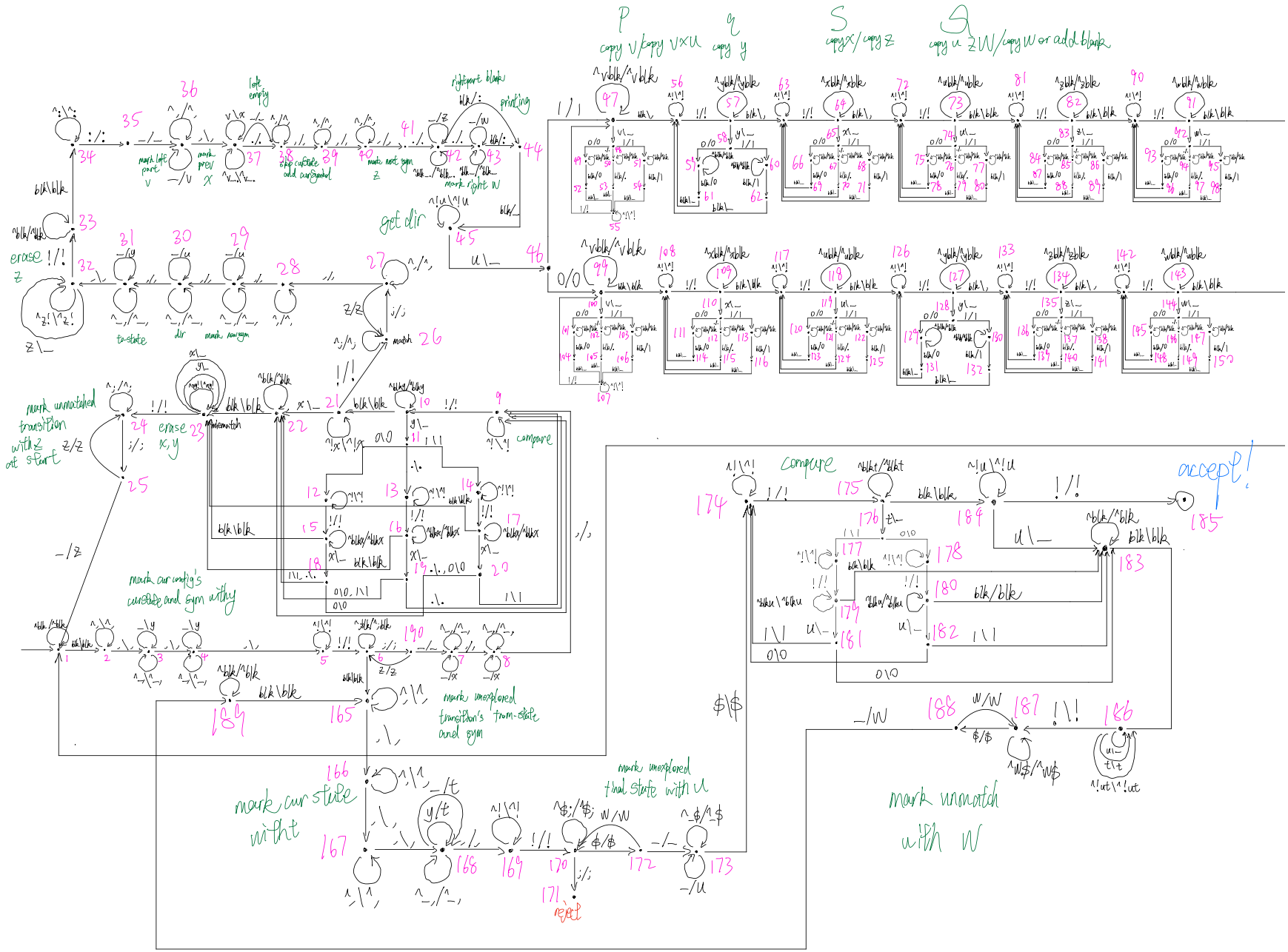
P
copy v/copy v×u
Q
copy y
S
copy x/copy z
copy u z W/copy W or add blank
left empty
right part blank
printing
mark left part v
mark prev x
step cur state add cur symbol
move next sym z
mark right W
get dir
erase z
to state
dir
mark new sym
match
mark unmatched transition with z at start
erase x, y
mismatch
compare
mark cur config's cur state and sym with y
mark unexplored transition's from-state and sym
mark cur state with t
mark unexplored final state with u
reject
accept!
mark unmatch with W

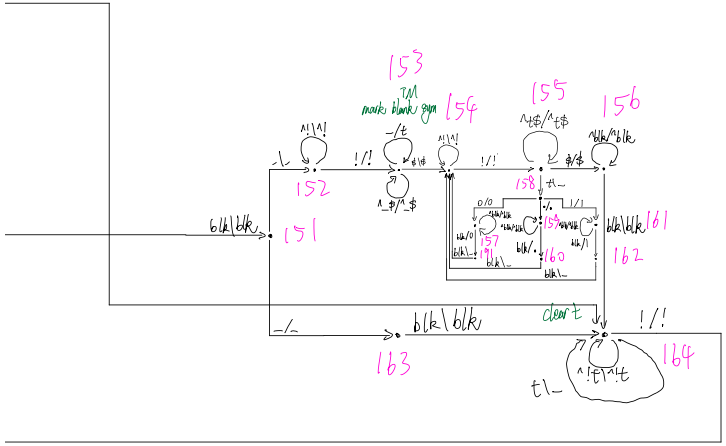
153
mark blank gap
154
155
156
152
151
157
158
159
160
161
162
163
164
clear t
blk\blk
!/!