北京郵電大學

Queen Mary University of London

For examiners' use only

1	
2	
3	
4	
Total	

EBU5376 B

Joint Programme Examinations 2023/24

EBU5376 Digital Signal Processing

Paper B

Time allowed 2 hours

Answer ALL questions

Complete the information below about yourself very carefully.

QM student number										
BUPT student number										
Class number										

Allowed: Basic calculators.
NOT allowed: Any Electronic devices including electronic calculators and electronic dictionaries.

INSTRUCTIONS

1. **You must NOT take answer books, used or unused, from the examination room.**
2. Write only with a black or blue pen **and in English**.
3. Do all rough work in the answer book – **do not tear out any pages**.
4. If you use Supplementary Answer Books, tie them to the end of this book.
5. Write clearly and legibly.
6. **Read the instructions on the inside cover.**

Examiners

Dr Yixuan Zou, Mr Andy Watson, Dr Richard Clegg.

Copyright © Beijing University of Posts and Telecommunications & © Queen Mary University of London 2023

Instructions

Before the start of the examination

1) Place your BUPT and QM student cards on the corner of your desk so that your picture is visible.

2) Put all bags, coats and other belongings at the back/front of the room. All small items in your pockets, including wallets, mobile phones and other electronic devices must be **placed in your bag in advance**. **Possession of mobile phones, electronic devices and unauthorised materials is an offence.**

3) Please ensure your mobile phone is switched off and that no alarm will sound during the exam. **A mobile phone causing a disruption is also an assessment offence.**

4) Do not turn over your question paper or begin writing until told to do.

During the examination

1) You must not communicate with or copy from another student.

2) If you require any assistance or wish to leave the examination room for any reason, please raise your hand to attract the attention of the invigilator.

3) If you finish the examination early you may leave, but not in the first 30 minutes or the last 10 minutes.

4) For 2 hour examinations you may **not** leave temporarily.

5) For examinations longer than 2 hours you **may** leave temporarily but not in the first 2 hours or the last 30 minutes.

At the end of the examination

1) You must stop writing immediately – **if you continue writing after being told to stop, that is an assessment offence.**

2) Remain in your seat until you are told you may leave.

Question 1

a) **Figure 1** shows the block diagram of a general DSP system. **[3 marks]**

Briefly explain the function of

i) the DAC **(1 mark)**

ii) the Reconstruction Filter. **(2 marks)**

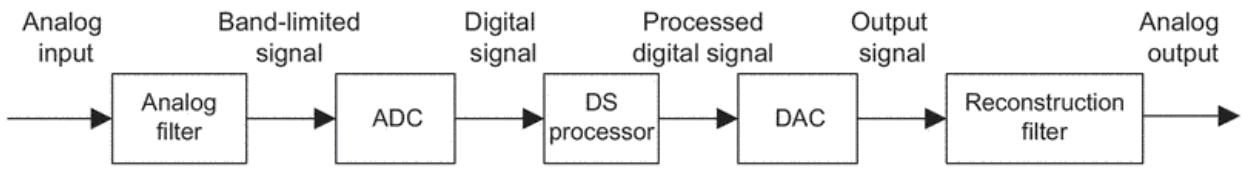

Figure 1

	Do not write in this column
	3 marks

b) This question is about poles and zeroes. A particular function of X(Z) has zeroes at 4 and -6, and poles at -2, 3 and 5. Determine the function X(Z) in $\frac{P(z)}{Q(z)}$ format. **[5 marks]**

	Do not write in this column
	5 marks

c) This question is about deciBels. **[4 marks]**

i) Briefly explain the purpose and the advantage of using a decibel unit of measurement.

(2 marks)

ii) Express a power ratio of 0.4 in dB. **(1 mark)**

iii) Express an amplitude ratio of 0.4 in dB. **(1 mark)**

	Do not write in this column
	4 marks

d) This question is about sampling and quantisation. **[11 marks]**

A signal of range 0 to10 volts is quantised using 3 bits. Calculate (to 3 decimal places):

i) the step size **(1 mark)**

ii) the quantisation levels **(6 marks)**

iii) the quantised values of sample values of 0.5, 1.9, 3.3, 4.1, 5.4, 7.2, 8.3, 9.5. **(4 marks)**

	Do not write in this column

	11 marks

e) This question is about convolution. Briefly explain the purpose of convolution in digital signal processing. **[2 marks]**

	Do not write in this column
	2 marks

Question marking: $\frac{}{3} + \frac{}{5} + \frac{}{4} + \frac{}{11} + \frac{}{2} = \frac{}{25}$

Question 2

a) This question is about the Discrete Time Fourier Transform (DTFT), and Discrete Fourier Transform (DFT).

[13 marks]

i) The equation for the DTFT of $x[t]$ is $X(\omega) = \sum_{t=-\infty}^{\infty} x[t]e^{-j\omega t}$ where ω is angular frequency and t is a discrete variable. Give the equation for the DFT of an N sample sequence $x[n], n = 0, \ldots, N$. **(3 marks)**

ii) What does the DFT assume that the DTFT does not? **(2 marks)**

iii) Give two ways to improve the resolution of the DFT. **(2 marks)**

iv) Give the DFT of the sequence [1,0,1] **(6 marks)**

	Do not write in this column

	13 marks

b) This question is about the Fourier Transform, $X(\omega) = \int_{t=-\infty}^{\infty} x(t)e^{-j\omega t}dt$. **[12 marks]**

i) Take the function $x(t) = \begin{cases} 1, t \geq 0 \\ 0, t < 0 \end{cases}$, give the Fourier transform $X(\omega)$. **(6 marks)**

ii) Why can we not use the Fourier series here? **(1 marks)**

iii) Write the Fourier transform using trigonometric functions. **(2 marks)**

iv) What does it mean when we say the Fourier transform is linear. Assume two functions $x(t)$ and $y(t)$ with transforms $X(\omega)$ and $Y(\omega)$ (you do not need to prove linearity just state it) **(3 marks)**

	Do not write in this column

		12 marks

Question marking: $\frac{}{13} + \frac{}{12} = \frac{}{25}$

Question 3

a) Briefly explain each of the following properties of DSP Systems: **[8 marks]**

i) Linearity **(2 marks)**

ii) Time-invariance **(2 marks)**

iii) Causality **(2 marks)**

iv) Memory. **(2 marks)**

	Do not write in this column

b) A particular system is represented by **Figure Q3b).** T is a unit delay.

[13 marks]

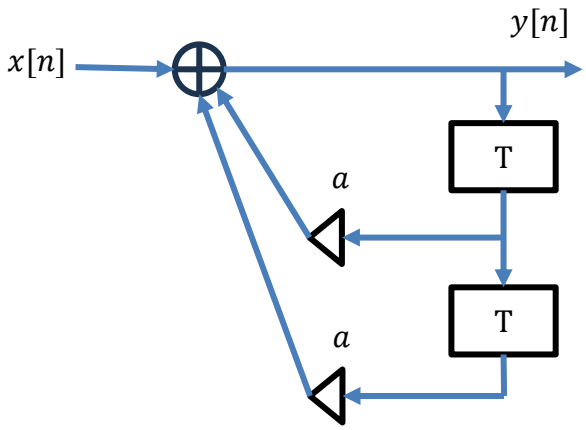

Figure Q3b)

Obtain:

i) The Linear Difference Equation **(2 marks)**

ii) The Z-Transform Transfer Function **(4 marks)**

iii) Determine the conditions for system stability. **(7 marks)**

	Do not write in this column

	13 marks

c) Suppose we have the transfer function of a system, H(z). Describe how we could obtain the system's frequency response. **[4 marks]**

	Do not write in this column
	4 marks

Question marking: $\frac{}{8} + \frac{}{13} + \frac{}{4} = \frac{}{25}$

Question 4

This question is about filter design and evaluation.

a) By assessing the amplitude response, filters can be classified into four types. For example, low-pass filter is one type of filter that preserves low-frequency components, while attenuating high-frequency components of the input signal.

[6 marks]

i) State the other THREE types of filters

(3 marks)

ii) Describe the functionalities of the three types of filters listed in part (i).

(3 marks)

	Do not write in this column

b) **Figure 1** illustrates the amplitude response of an unknown filter. The amplitude response is plotted on a linear scale.

[9 marks]

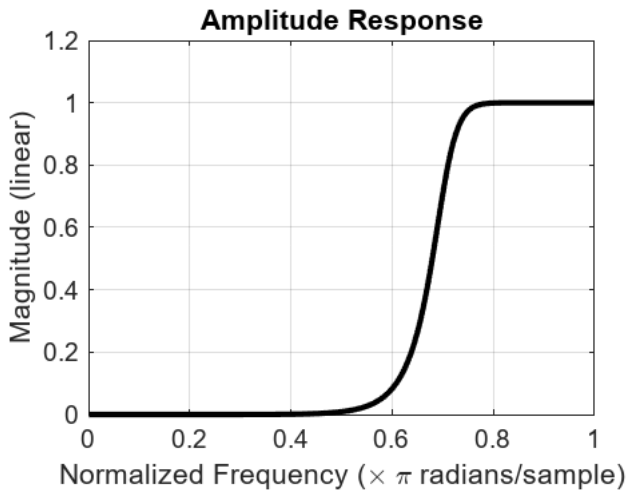

Figure 1: Amplitude response of an unknown filter.

i) Which type of filter is shown in **Figure 1**?

(2 marks)

ii) You are told that the filter illustrated in **Figure 1** is a digital filter obtained under a sampling rate of 20Hz. Estimate the unnormalized cut-off frequency of the digital filter.

(7 marks)

	Do not write in this column

	9 marks

c) Finite Impulse Response (FIR) filters can be constructed using the window method. There are three commonly used windows: Rectangular window, Hamming window, Hanning window. The equations of the windows are given as follows:

$$w_{rec}[n] = 1, \quad -M \le n \le M$$

$$w_{ham}[n] = 0.54 + 0.46\cos\left(\frac{n\pi}{M}\right), \quad -M \le n \le M$$

$$w_{han}[n] = 0.5 + 0.5\cos\left(\frac{n\pi}{M}\right), \quad -M \le n \le M$$

In the above equations, the length of the resulted filter is $2M + 1$. Answer the following questions: **[10 marks]**

i) The Hamming window and the Hanning window share a similar formula. In terms of the application of the filters, discuss the main differences between the two windows. **(2 marks)**

ii) Given a filter with an impulse response of $h[n] = [0.2, 0.25, 0.3, 0.25, 0.2], n = -2, \ldots 2$. Apply the Hamming window and the Hanning window to the filter, respectively. **(8 marks)**

	Do not write in this column

Do not write in this column

2023-2024
Rough Working
Page 16 of 18

Do not write in this column

2023-2024

Rough Working

Page 17 of 18

Do not write in this column

2023-2024

Rough Working

Page 18 of 18