Queen Mary
University of London
Science and Engineering

EBU4202: Digital Circuit Design
Lab 1 Introduction

Dr. Md Hasanuzzaman Sagor (Hasan)
Dr. Chao Shu (Chao)
Dr. Farha Lakhani (Farha)
Dr. Fatma Benkhalifa

School of Electronic Engineering and Computer Science,
Queen Mary University of London,
London, United Kingdom.

General Requirement

Before attending the lab.

- The lab sheets will be made available before the lab sessions
- Read the lab sheet through
- Complete at least the questions in the ”**Preparatory Work**”.
- We encourage you to complete as many questions in the lab sheet as you can before

Note for the Lab

- If you wait till the lab session to do the preparation, you will not have enough time to complete the lab.
- The completed lab sheets must be handed in at the end of the lab session. Late submissions will not be accepted, resulting in a score of 0!

Instrument

Power Supply

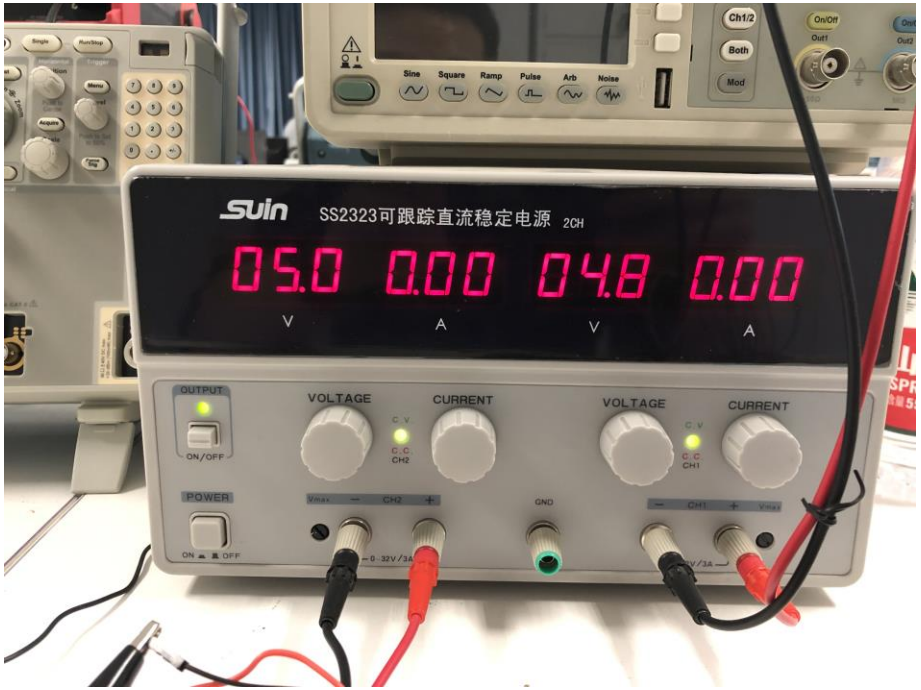

Queen Mary
University of London

Instrument

Breadboard

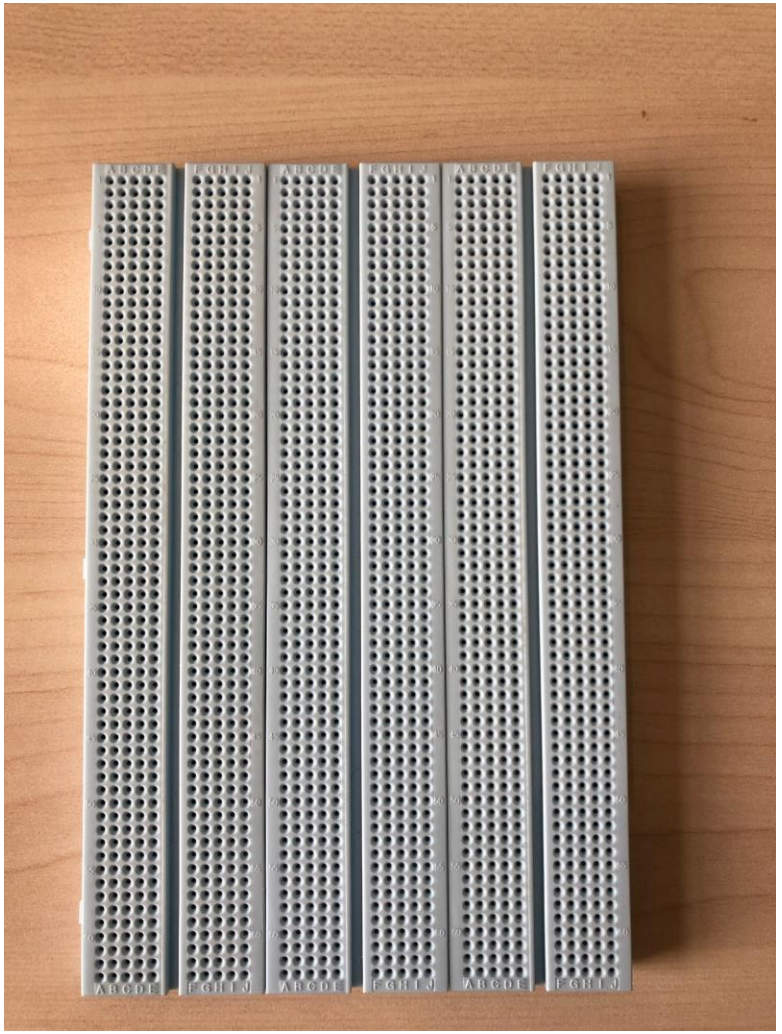

The breadboards you will receive in the lab may be slightly different from this one

Queen Mary
University of London

Instrument

Components

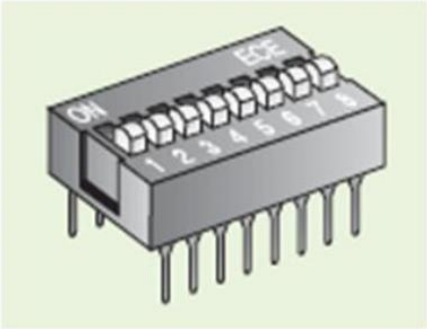

DIL switch (8 way)

LED Bar Graph Array (10 elements)

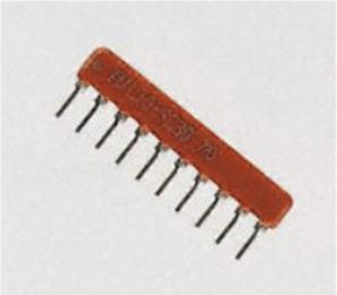

SIL Commoned Resistor (220 ohms)

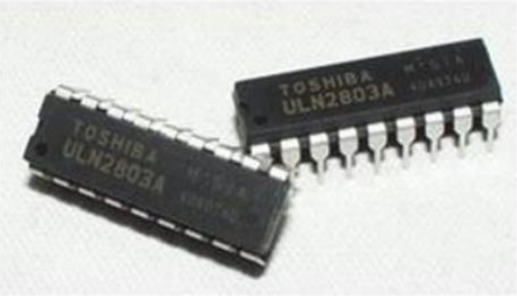

8-channel Darlington driver IC

Instrument

Gates

Gates for test

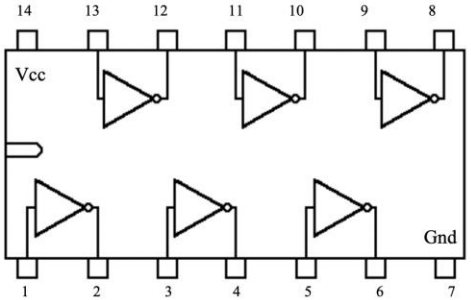

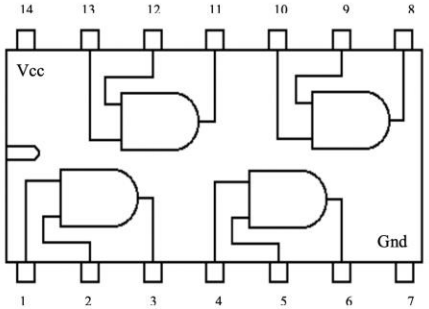

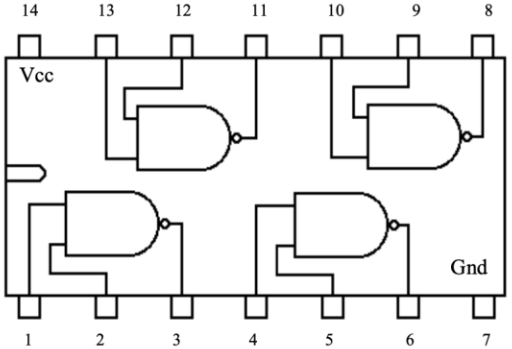

Figure 9 – 7400 (labelled *HD74LS00P*) quadruple 2-input NAND gates.

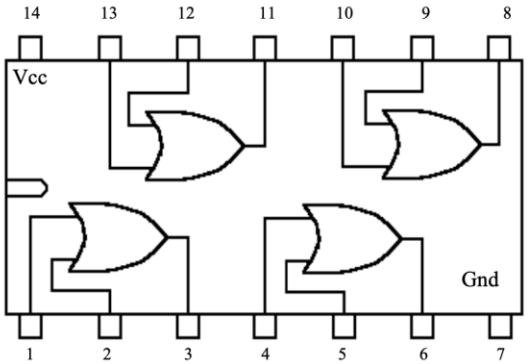

Figure 10 – 7432 (labelled *HD74LS32P*) quadruple 2-input OR gates.

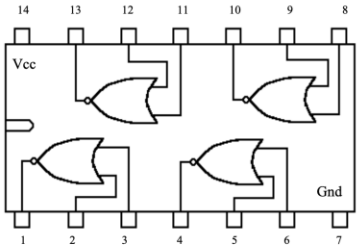

Figure 11 – 7402 (labelled *HD74LS02P*) quadruple 2-input NOR gates.

Instrument

Basic Circuit Diagram/Configuration

Gates for test

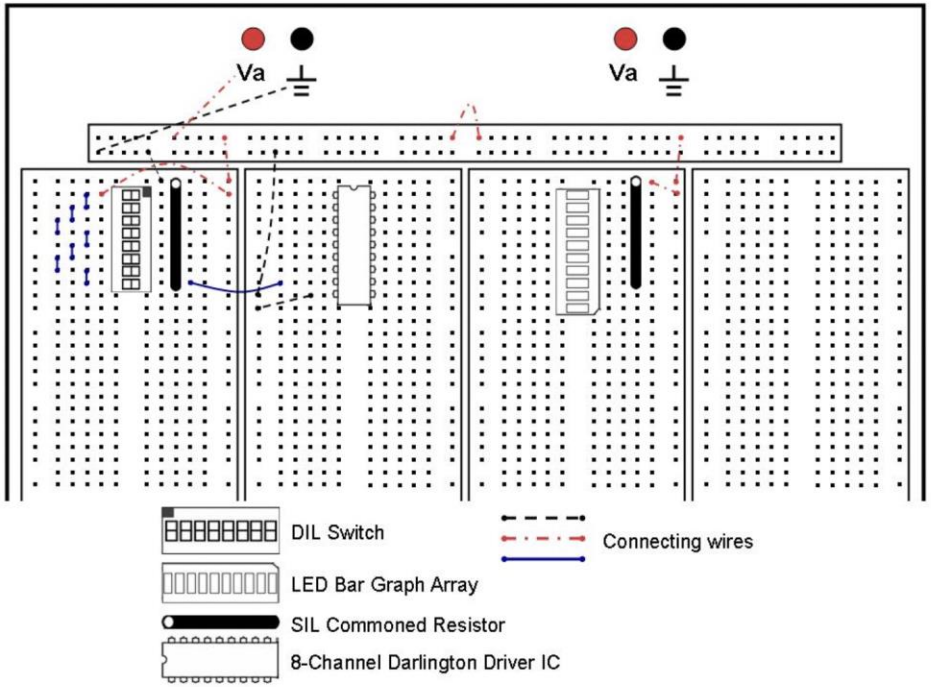

Figure 6 – The *breadboard* configuration[2].

The breadboards you are going to use will be slightly different from this one

Experiment

Any question marked with the symbol (***) requires that you demonstrate your work
to one of the TAs

EXPERIMENT 1 – Verifying the Truth Tables

(***) Question 7.1.1 [4 Marks] – Complete the **Table 1** below by testing each IC of *Section 6 – "Logic Gates"* (i.e., from **Figure 7** through to **Figure 11**) in turn.

Inputs		**Outputs ($z = f(x, y)$)**				
X	***Y***	***x'***	***x.y***	***(x.y)'***	***x+y***	***(x+y)'***
0 0						
0 1		-				
1 0						
1 1		-				

Table 1 – ***Answer to Question 7.1.1***: Testing of 74 Series TTL Circuits.

Lab 1 Introduction - Experiment

Any question marked with the symbol (***) requires that you demonstrate your work
to one of the TAs

EXPERIMENT 2 – Alternative Implementations of Functions

(***) Question 7.2.1 [4 Marks] – Implement the circuits in **Figure 12** and complete their truth tables. Compare the results with functions in **Experiment 1**; what conclusions can you derive?

Answer to Question 7.2.1

Note: The circles on the inputs to the AND and OR gates indicate inversion, which you may implement in any one of the 3 ways that you should have discovered by now.

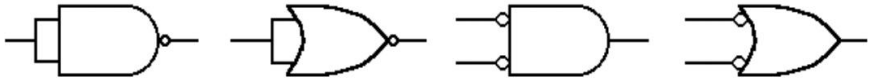

Figure 12 – Functions to be implemented.

Queen Mary
University of London

Lab 1 Introduction - Experiment

Any question marked with the symbol (***) requires that you demonstrate your work
to one of the TAs

EXPERIMENT 3 – The Exclusive OR (XOR) Function

The Exclusive OR function is used less frequently than the other standard forms that you have used so far, and so is not available here on an IC. However, it can be implemented in a number of different ways; probably the simplest way is using all four gates on a 7400 IC.

(***) Question 7.3.1 [5 Marks] – Build and test the circuit shown in **Figure 13** and complete the truth table.

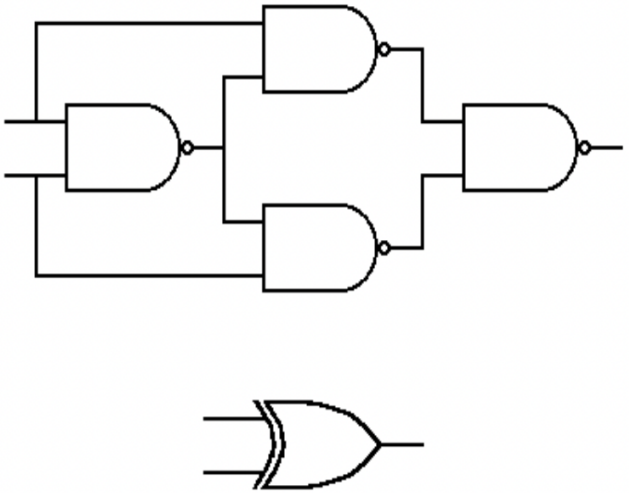

Figure 13 – The Exclusive OR function, using NAND gates and the XOR logic symbol.