Queen Mary
University of London
Science and Engineering

EBU4202: Digital Circuit Design
Latches and Flip-Flops

Dr. Md Hasanuzzaman Sagor (Hasan)
Dr. Chao Shu (Chao)
Dr. Farha Lakhani (Farha)
Dr. Fatma Benkhelifa

School of Electronic Engineering and Computer Science,
Queen Mary University of London,
London, United Kingdom.

Overview: Sequential Logic Design Principles

* Introduction
* Bistable Elements
* Latches & Flip-Flops
* Analysis Procedure
* Design Procedure

Chapter 7 – “Digital Design: Principles and Practices” book

Sequential Circuits (1/2)

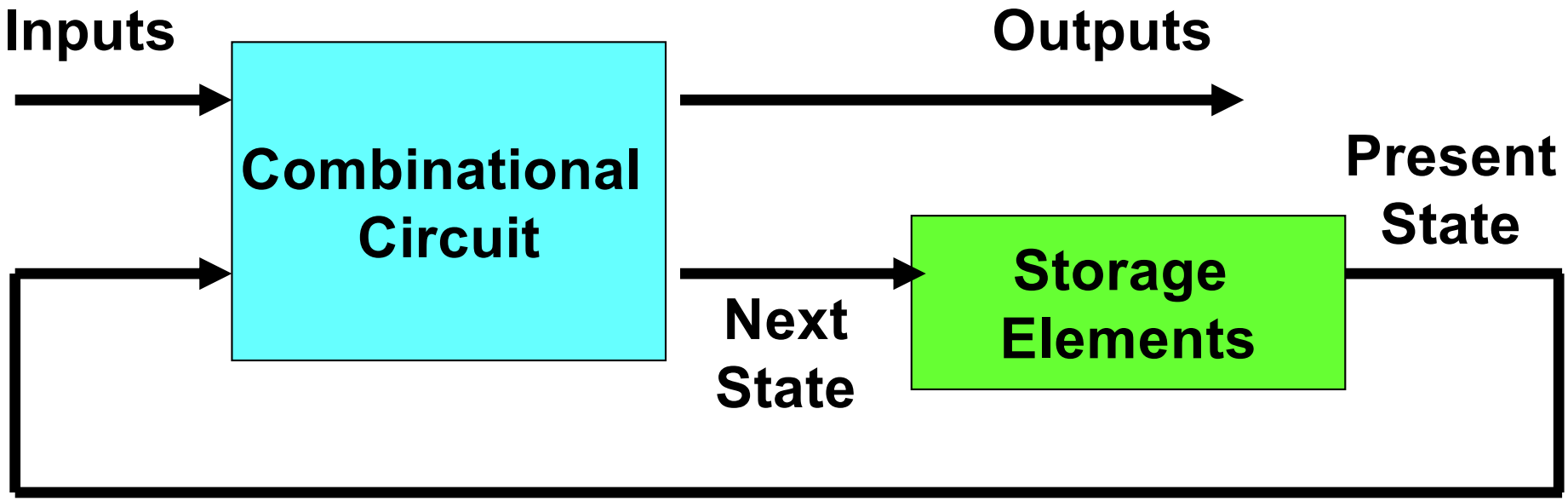

Sequential Circuit

- consist of *combinational circuits* and some form of *memory*.
- a circuit whose outputs depend not only on current inputs, but also on the past sequence of inputs.

Sequential Circuits (2/2)

- **Sequential systems** consist of *combinational circuits* and some form of *memory*.

- **Memory** can be either:
  - conventional memory devices; ***or***
  - some type of feedback or delay network that serves in place of memory.

- ***Examples*** of **sequential circuits**:
  - Traffic Lights;
  - elevator controller.

Can you think of **other examples**?

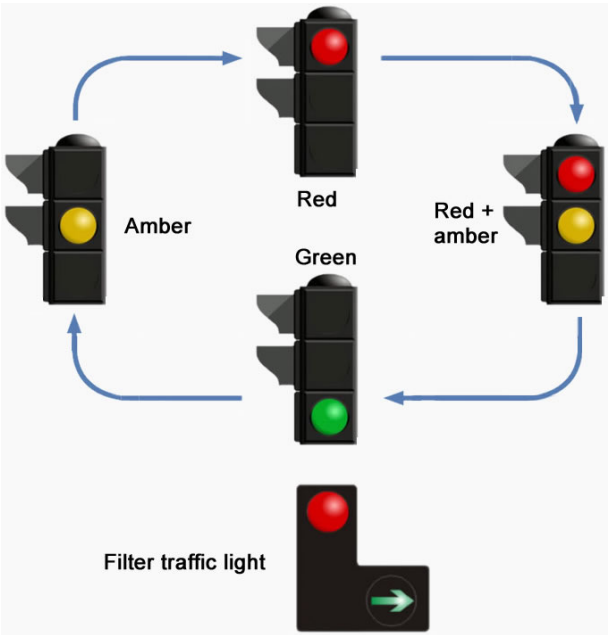

Synchronous *vs* Asynchronous

- *Sequential systems* come in two basic forms:
  - ***Synchronous*** → The system's behavior can be defined from the knowledge of its signals at *discrete moments in time*.
  - ***Asynchronous*** → The behavior depends on the order in which inputs change and can be affected at *any instant of time*.

1. How do you think synchronisation is achieved?
2. What do you think may happen with asynchronous systems?

State

- ***State***: The state or characteristics of a circuit are described by the values of its outputs.
  - Given a circuit with **N** outputs, with each taking on a binary value, the circuit has a total of $\mathbf{2^N}$ possible states.
  - A state can be *stable* or *metastable*.

- For a sequential circuit, given the *current state* and *input*, we can predict the *next state*.

Sequential circuits: also called **FSMs** (Finite State Machines).

Clock Signals (1/2)

- ***Characteristics of a clock signal***:
  - Most sequential circuits undergo a state change by a clock signal.
  - A clock signal may be *active high* or *active low*.
  - Its possible states include *high*, *low*, *rising edge*, *falling edge*.
  - Its parameters include *period*, *frequency*, and *duty cycle*.

Period: time between successive transitions in the same direction.

Clock Signals (2/2)

- ***Graphical illustration of a clock signal's operation***:

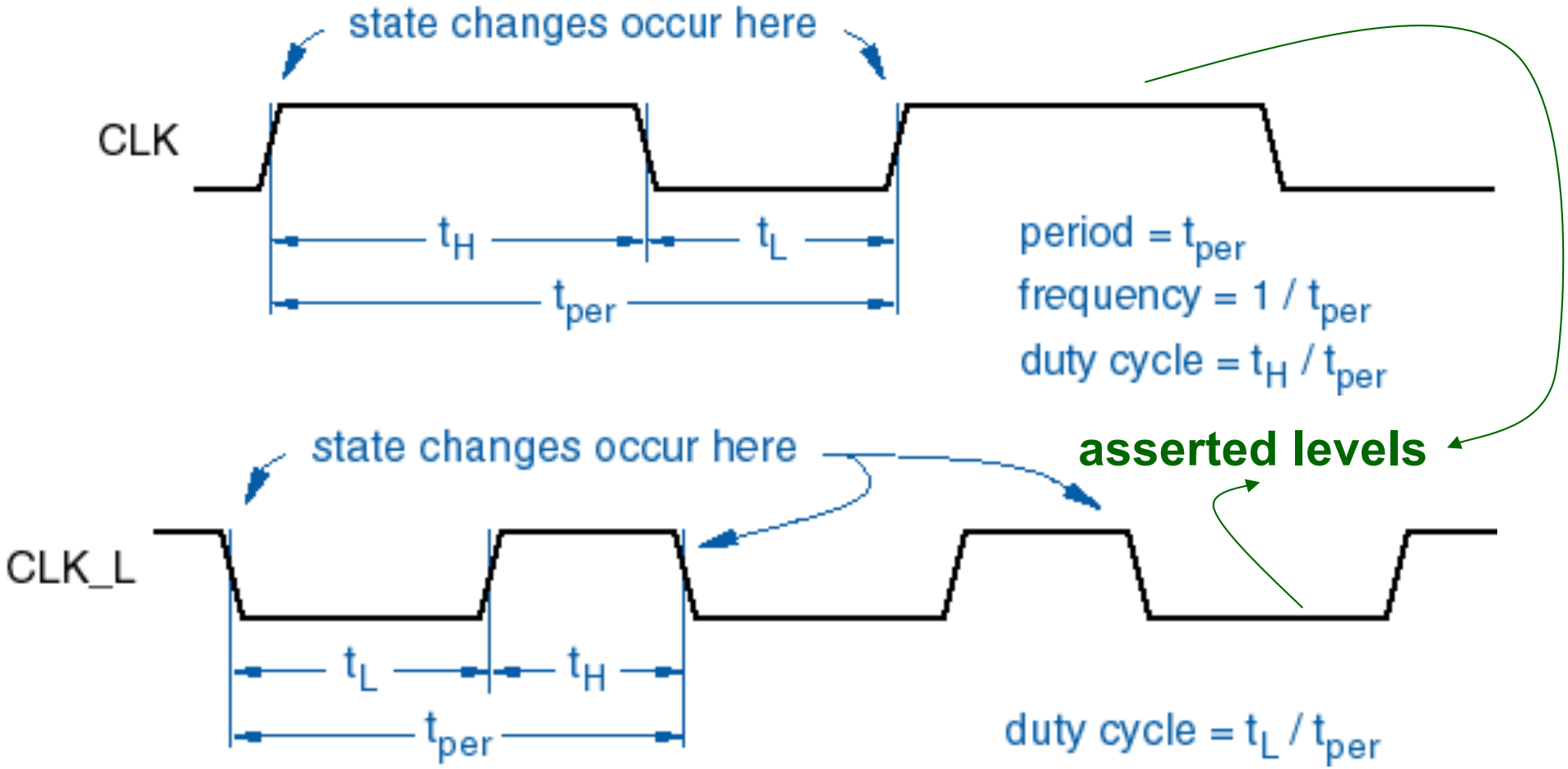

Synchronous Clocked Sequential Circuit

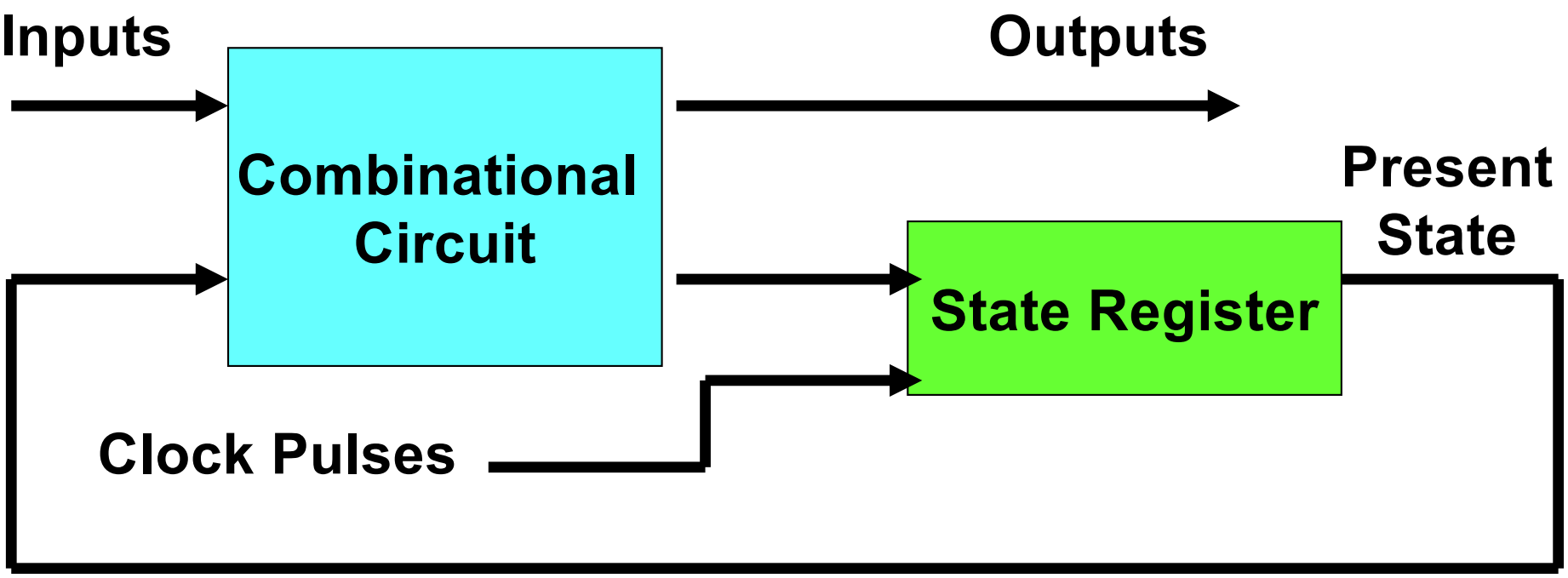

Timing Diagram of Clock Pulses

Gate Delays and Time Diagrams

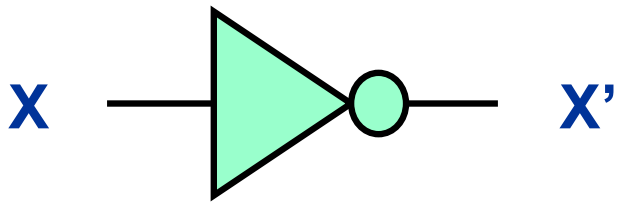

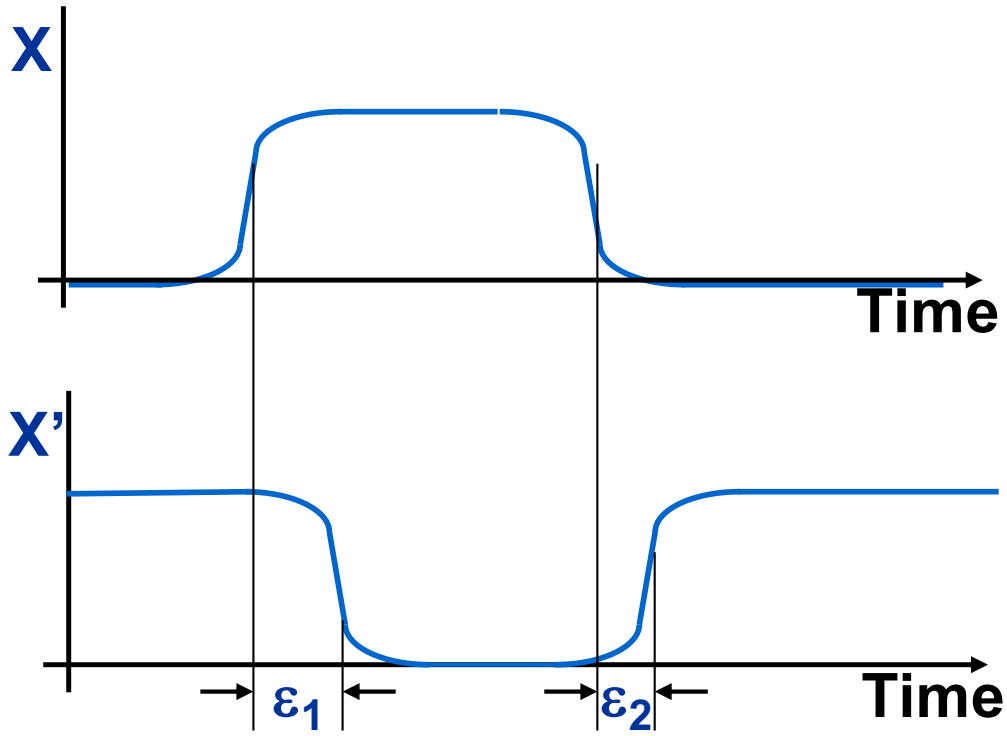

ε_1 may be different from ε_2, **why?**

Q. What does **Propagation Delay** depend on?

Oscillating Circuit: Not Stable

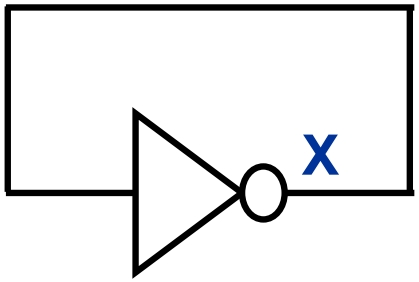

What does "**propagation delay**" depend on?

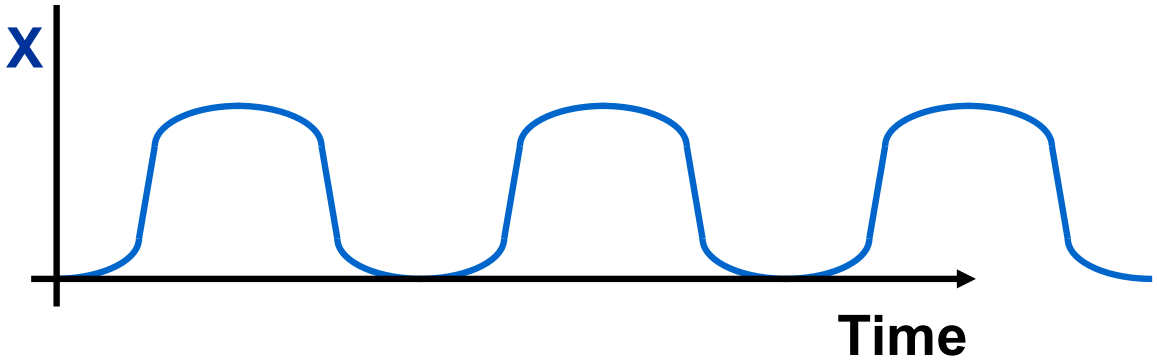

Circuit ***never*** reaches stability!!

Feedback Loop

Simplest bistable feedback circuit.

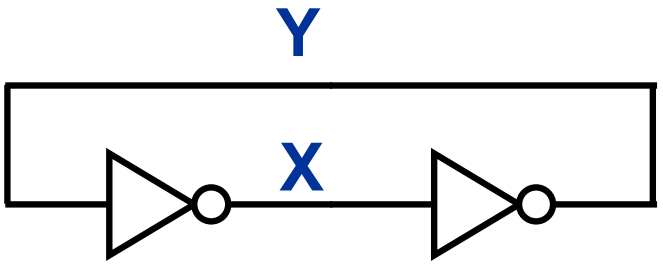

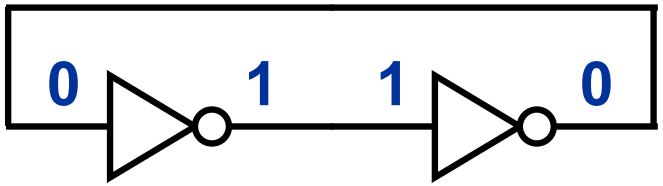

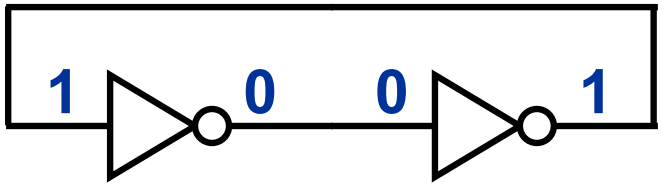

Overview: Sequential Logic Design Principles

* Introduction
* Bistable Elements
* Latches & Flip-Flops
* Analysis Procedure
* Design Procedure

Chapter 7 – “Digital Design: Principles and Practices” book

Bistable Elements (1/2)

- **x**: the simplest sequential circuit.
  - Consists of *2 inverters* and has *no inputs* and *2 outputs*.
  - Its *state* is characterised by the *values of its 2 outputs*.
  - It has only *2 states*: *(1,0)* or *(0,1)*.
  - Its *output* depends only on its *previous input*, through a feedback loop.

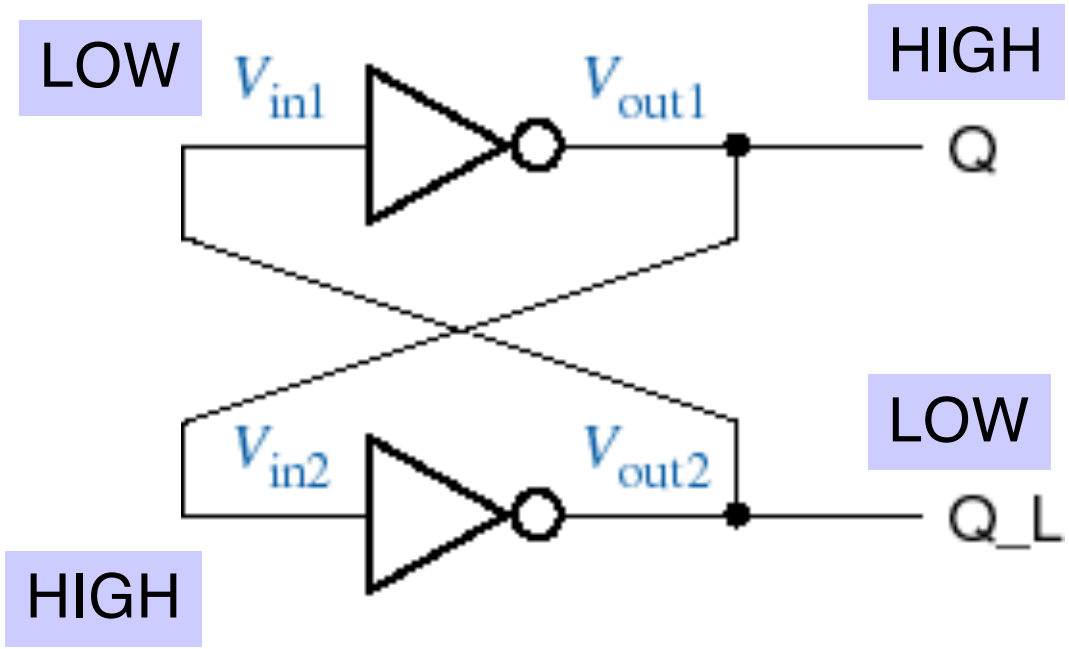

Bistable Elements (2/2)

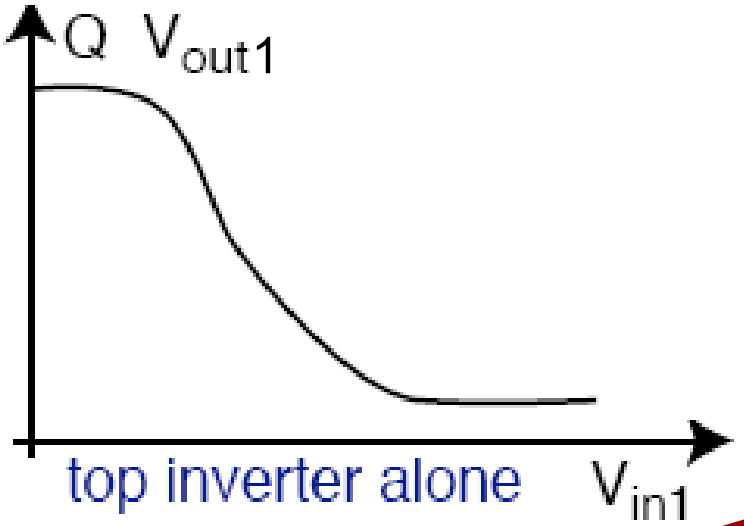

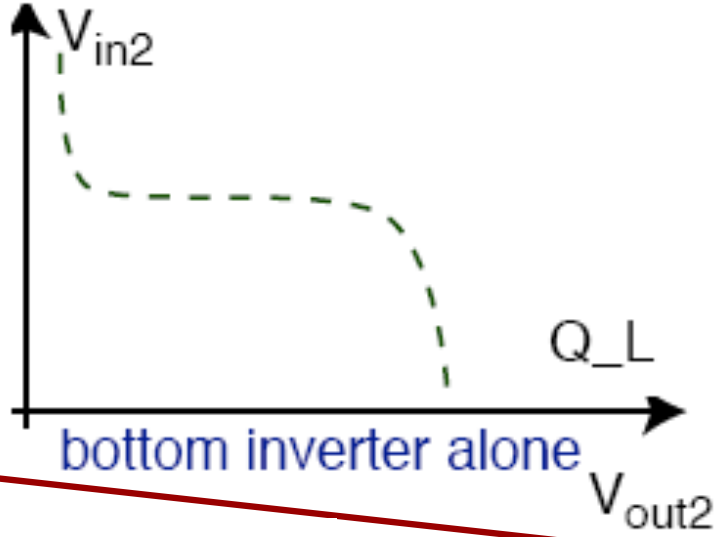

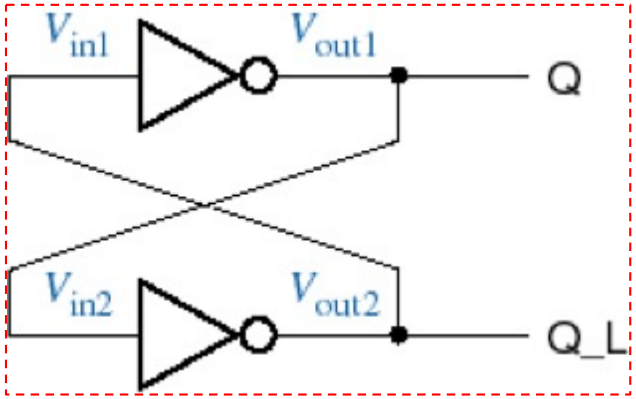

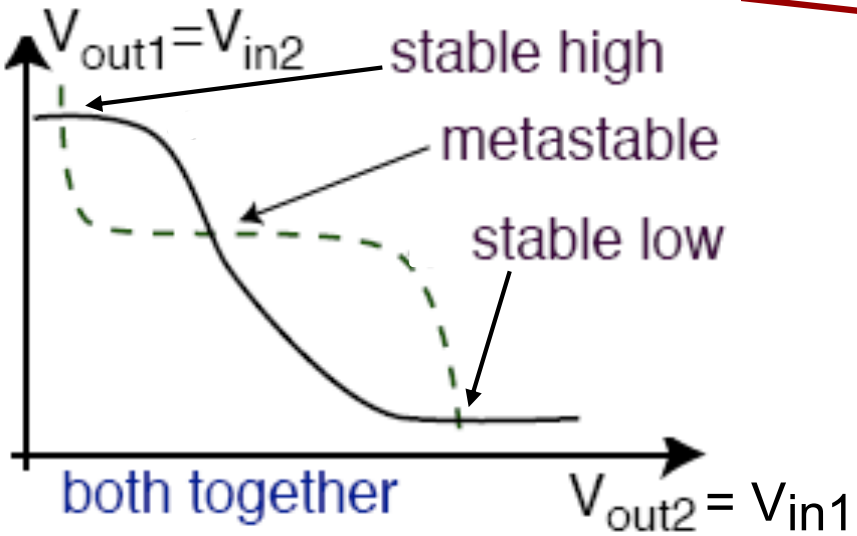

Queen Mary
University of London

Metastability & Stable States

- ***There are not 2 states***, ***there are 3***!
  - **Metastable** occurs at the point where both inputs are halfway between ***0*** and ***1***.
  - Not a valid state!
  - Could stay in ***metastable*** forever if it wasn't for noise.

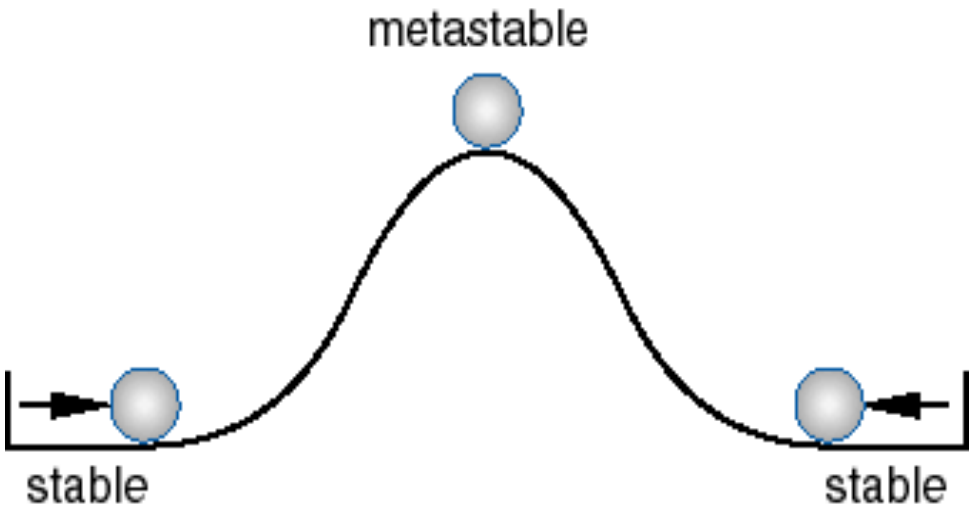

Metastability: Why is it important?

- **Metastability**:
  - All real systems are subject to it.
    - Problems are caused by "***asynchronous inputs***" that do not meet **flip-flop setup** and **hold times**.
  - Metastability is severe in high-speed systems since clock periods are so short, and "***metastability resolution time***" can be longer than one clock period.
  - Many digital designers, products, and companies have been "burned" by this phenomenon.

Overview: Sequential Logic Design Principles

* Introduction
* Bistable Elements
* Latches & Flip-Flops
* Analysis Procedure
* Design Procedure

Chapter 7 – “Digital Design: Principles and Practices” book

Latches

- **Latch**: Basic storage element from which all ***flip-flops*** are constructed.
- ***Latches*** by themselves are not practical for use in synchronous sequential systems:
  - Simple ***SR Latches*** and ***D Latches*** do not have control methods to synchronise storage of data elements and therefore cannot be used in synchronous systems.

Set Reset (SR) Latch

- **SR Latch**:
  - ***Undefined state*** occurs when both *Set* and *Reset* inputs are ***True*** (this is "Problematic Design").
  - Two types: *NOR Gate* and *NAND Gate*.
    - Basically operate in the same way, but use different logic levels to define **truth**.
  - 74 series logic chips: **74LS279**
  - However, ***not very practical*** for clocked synchronous circuits!

SR Latch with NOR Gates

SR Latch: (1) *S* sets or presets *Q* to *1*; (2) *R* resets or clears the *Q* output to *0*.

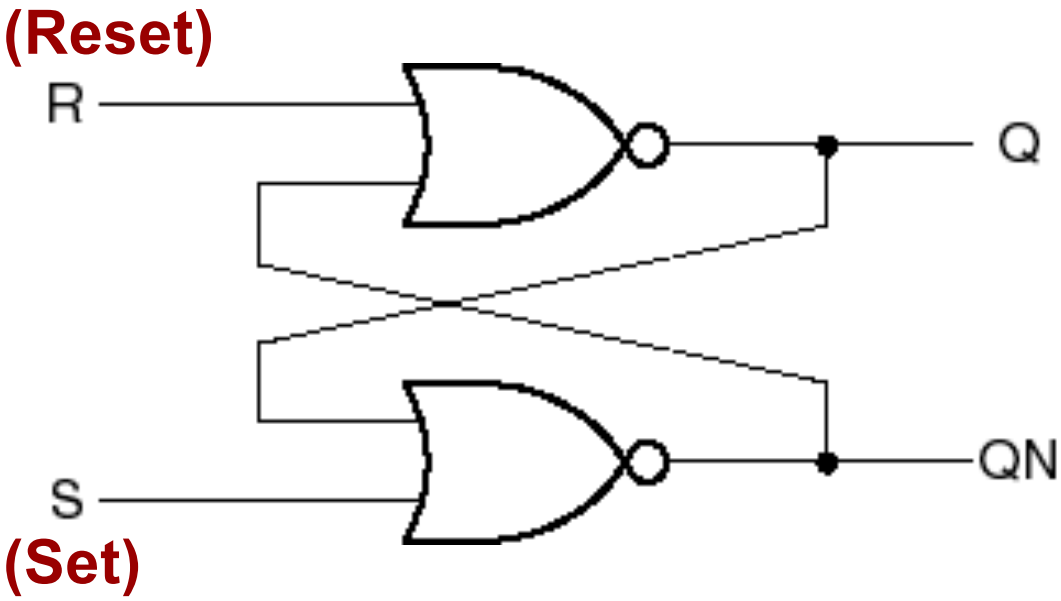

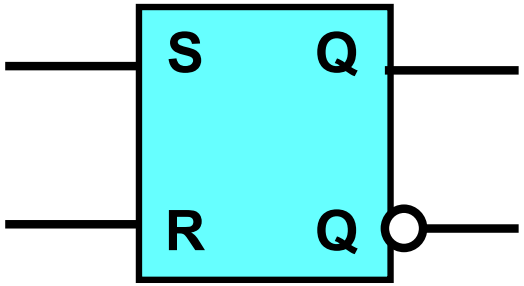

Inputs		***Outputs***	
S	R	Q	QN
0	0	last Q	last QN
0	1	0	1
1	0	1	0
1	1	0	0

Undefined operation when both inputs are ***True***.

Queen Mary University of London

SR Latch Operation (SET)

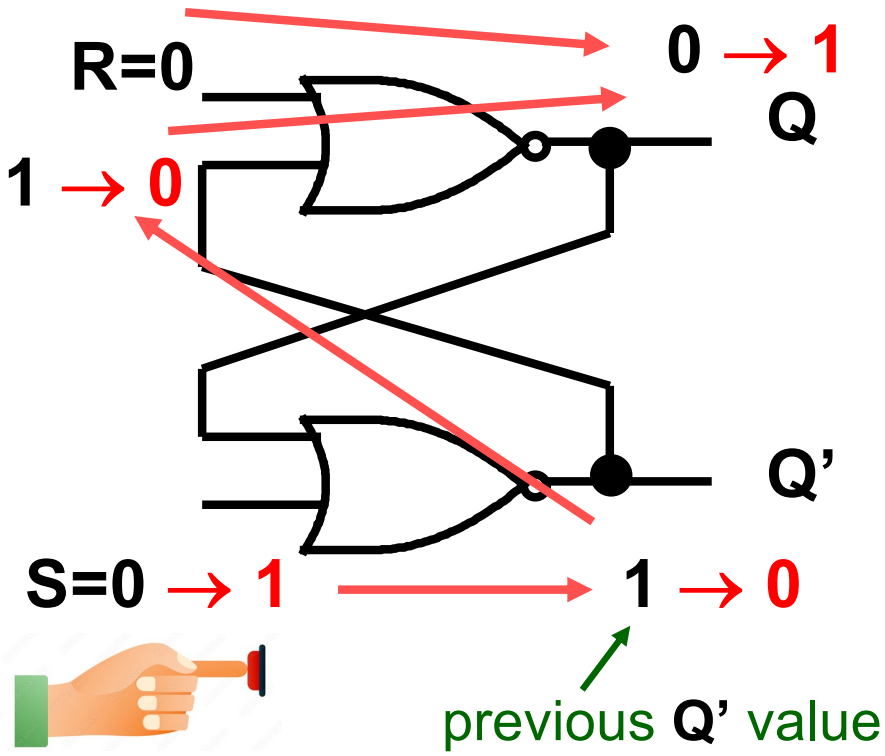

***SET* operation**

(changing *S* to *1*)

Initially Q = 0; Q' = 1

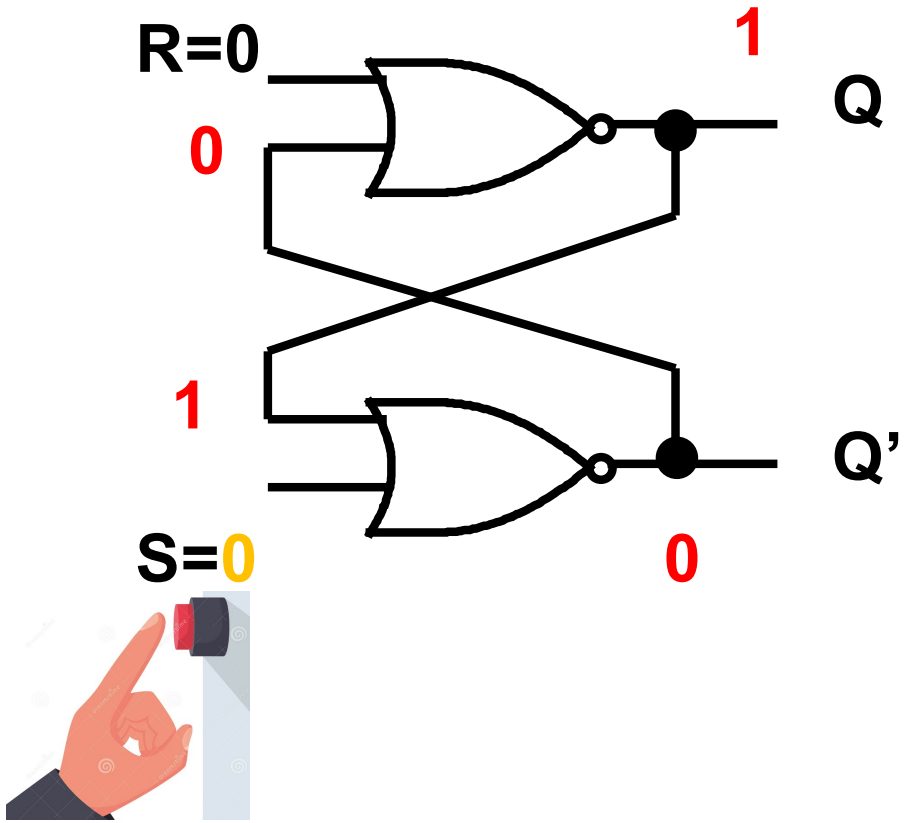

Stable when:

S = R = 0, Q = 1

SR Latch Operation (RESET)

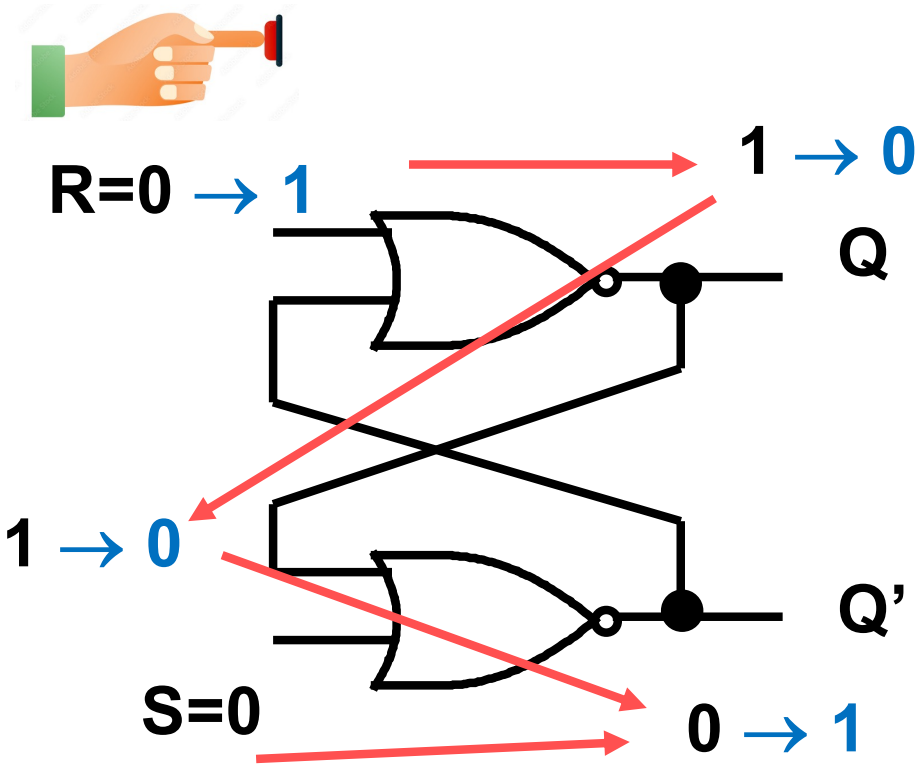

***RESET* operation**
(changing *R* to *1*)
Initially Q = 1; Q' = 0

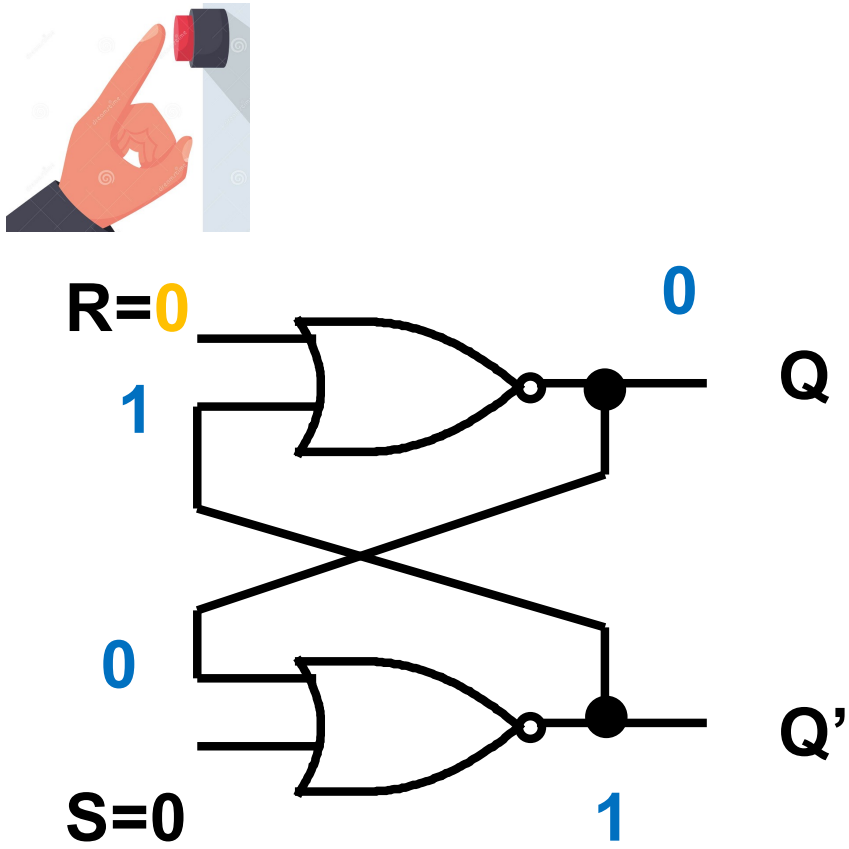

Stable when:

S = R = 0, Q' = 1

What about S = R = 1?

- What happens when both **Set** and **Reset** are ***True***?
  - Assume that <u>both</u> *S* and *R* transition to *1* simultaneously.
  - Then, *Q* becomes '0', but *Q'* remains '0'! So **outputs are no longer complements of each other**.

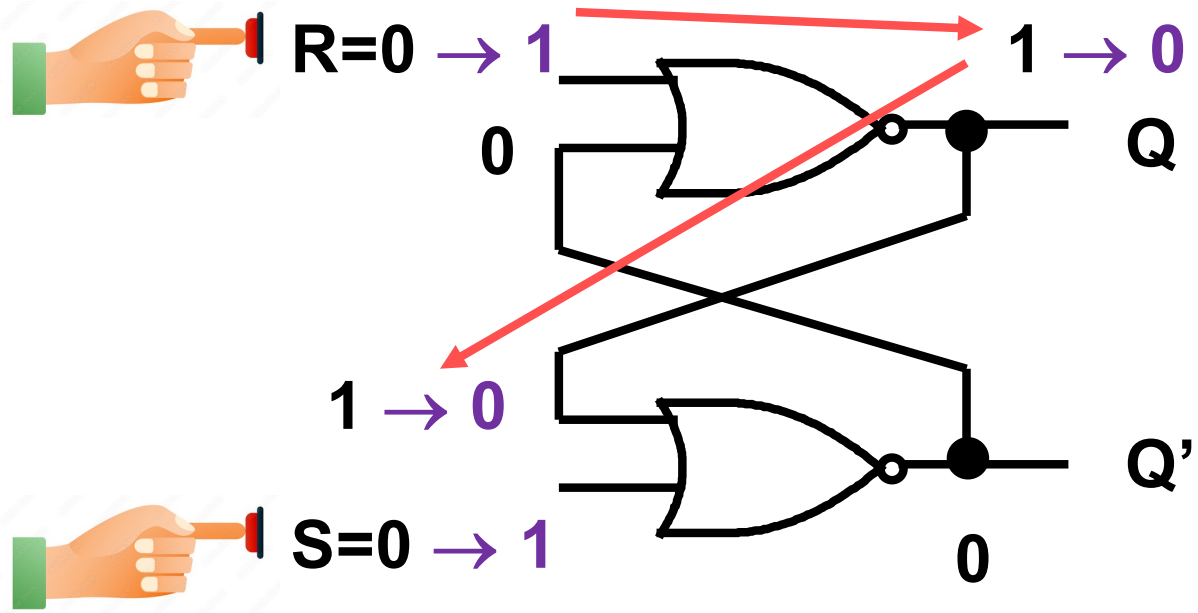

What happens when *S* and *R* return to *0*?

- **Oscillation** occurs if <u>both</u> ***S*** and ***R*** return to ***0*** simultaneously! But at some point, in practical circuit, the system will settle into a stable condition due to the propagation delay.
- The bottom line is that ***S = R = 1*** is an illegal input condition (or the SR latch should be designed, such that one input is ***dominant***).

This **can be avoided** by using "**recovery time**" concept.

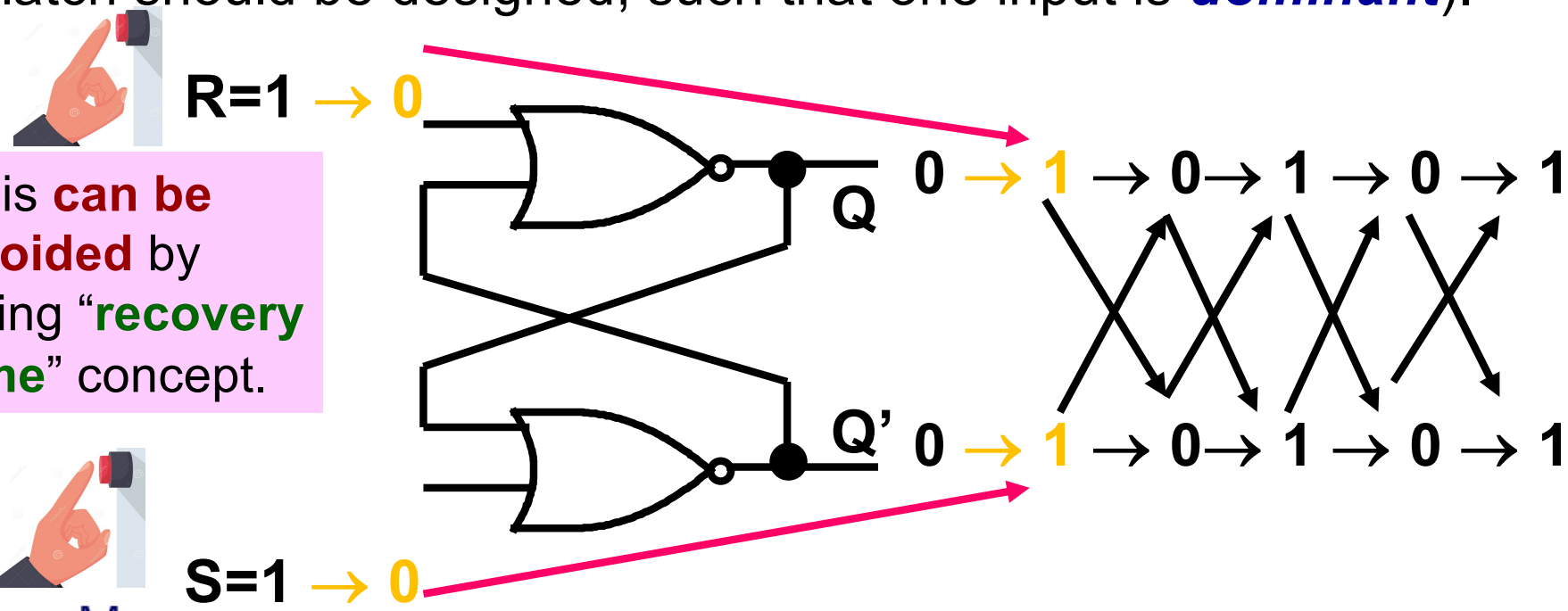

SR Latch (Built with NAND Gates)

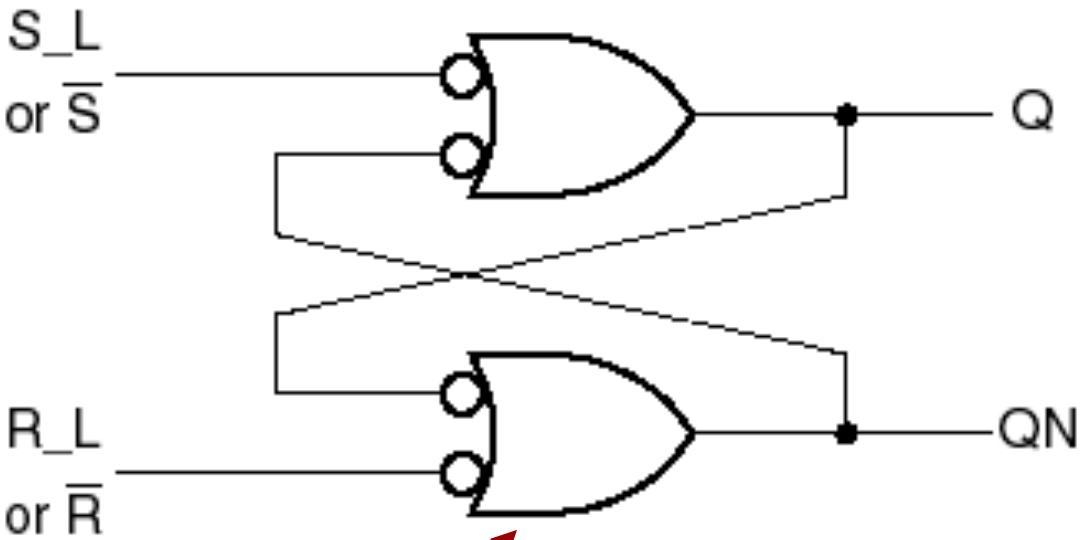

Same function as a **NAND** gate

$\overline{S}\overline{R}$ Latch

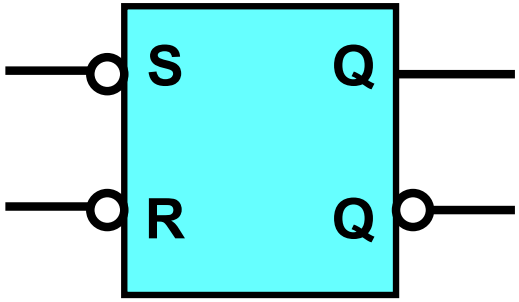

Inputs		*Outputs*	
S_L	R_L	Q	QN
0	0	1	1
0	1	1	0
1	0	0	1
1	1	last Q	last QN

Undefined operation when both inputs are **True**.

SR Latch with Control Input (1/2)

- What happens if either ***Set*** or ***Reset*** are changed in an SR Latch?
  - Must come up with ***control method*** (Enable) to control when SR Latch can be changed.
  - Leaving ***Control Line*** at logic '0' prevents latch from being written with new value.
  - But still have a problem with indeterminate outputs!

SR latch with control input: **only sensitive to S, R** inputs when control line is asserted.

SR Latch with Control Input (2/2)

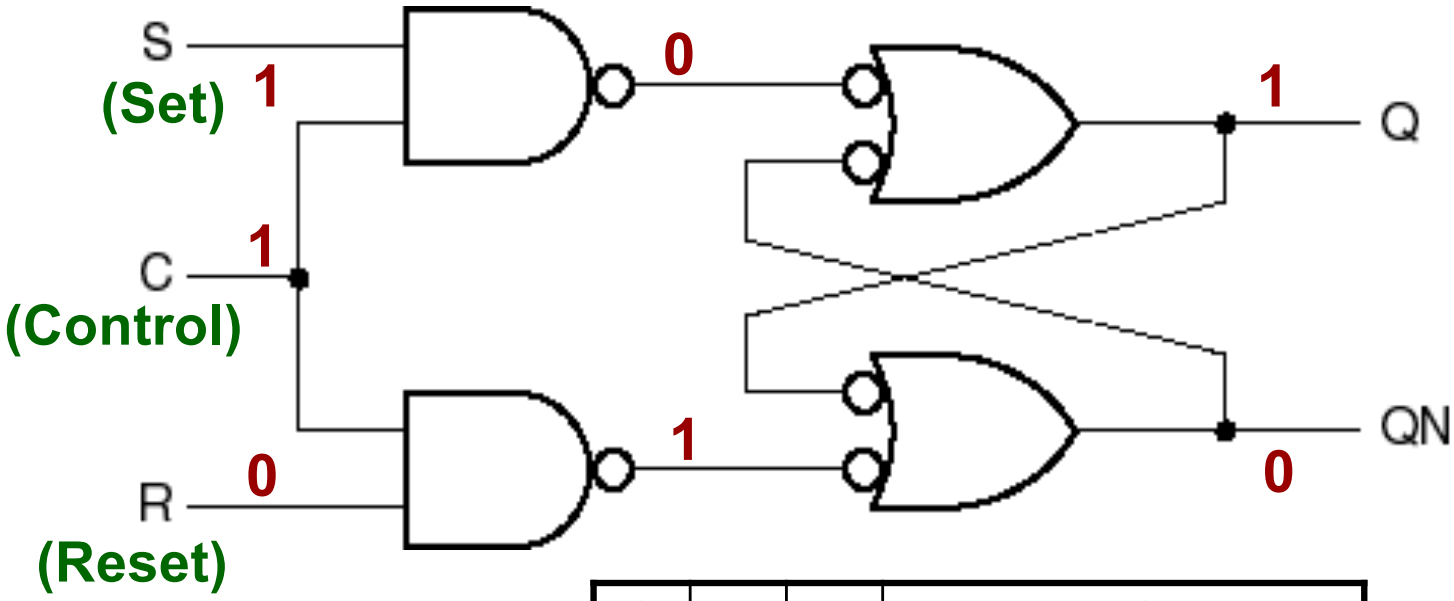

SR Latch
with Enable

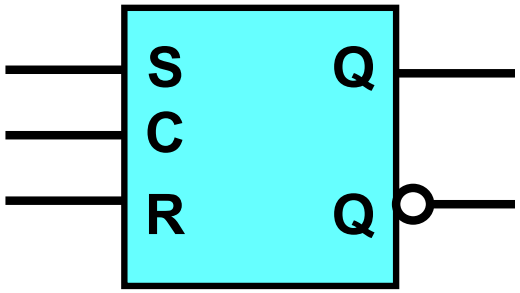

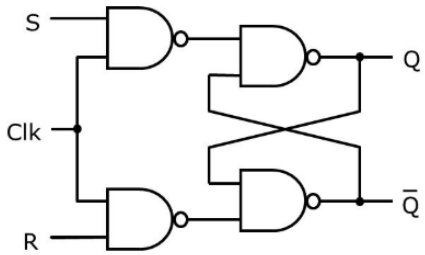

S	R	C	Q*
0	0	1	
0	1	1	
1	0	1	
1	1	1	
x	x	0	

Queen Mary
University of London

D Latch (1/2)

- So far, **we can say**:
  - Don't ever want to design a system where the next state is indeterminate.
  - Can eliminate the ***indeterminate state*** by ensuring that both ***Set*** and ***Reset*** inputs are never equal to '**1**' at the same time!
- **D Latch**:
  - Has only *two inputs*: **Data** (D) and **Control** (C).
  - *D* input to *Set* input and the complement of *D* input to the *Reset* input always.
  - No longer have an indeterminate state.

D Latch (2/2)

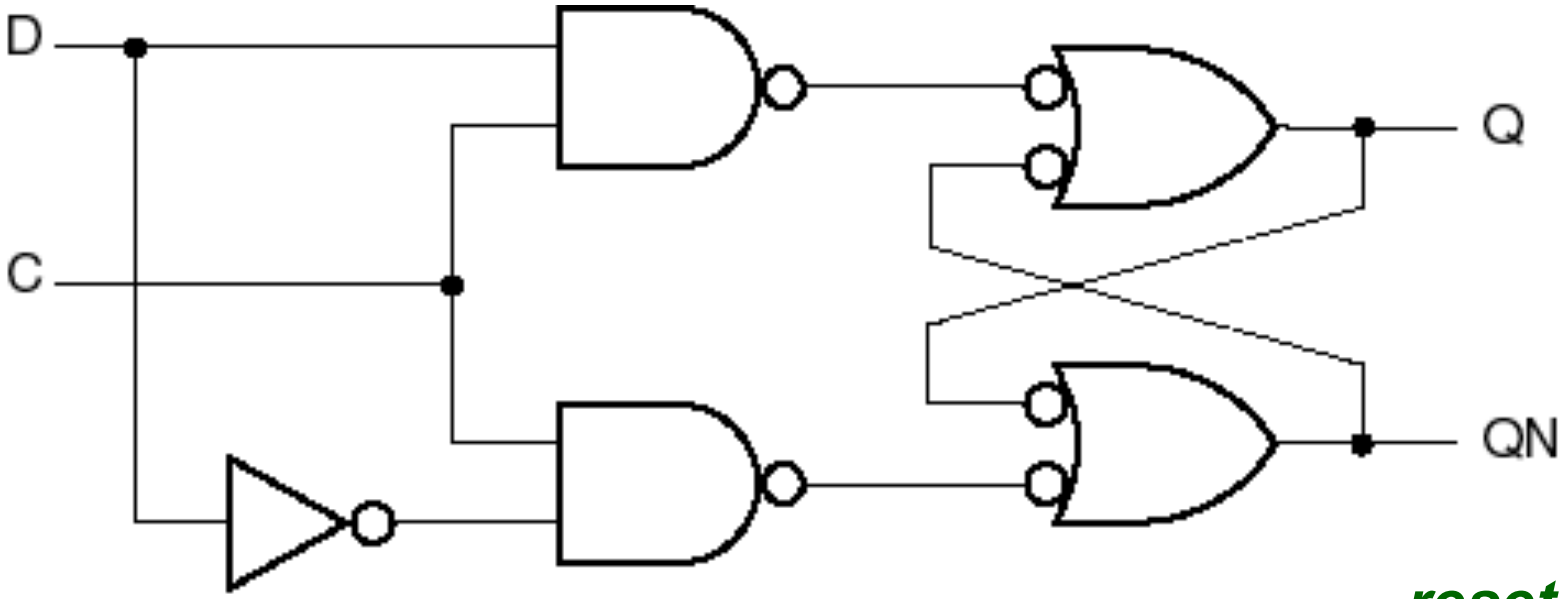

D Latch

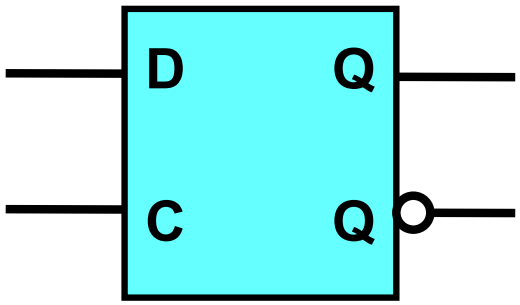

C	D	Q	QN
1	0	0	1
1	1	1	0
0	x	last Q	last QN

***reset* state**

***set* state**

D-Latch Operation

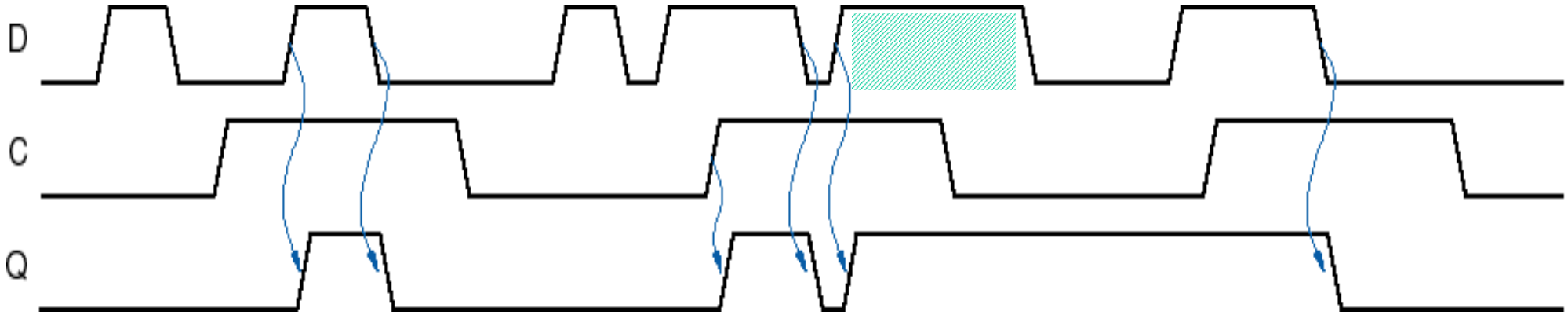

There's a *time window around the falling edge* of **C** when **D** must not change.

Task 1

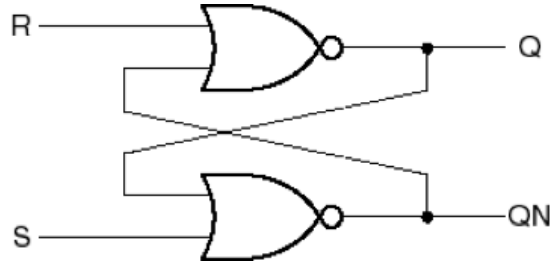

- Draw the outputs of an SR latch for the input waveforms shown below. *Assume* that the propagation delay of a NOR gate is 10ns.

S	R	Q	QN
0	0	last Q	last QN
0	1	0	1
1	0	1	0
1	1	0	0

Q* = S + R'Q

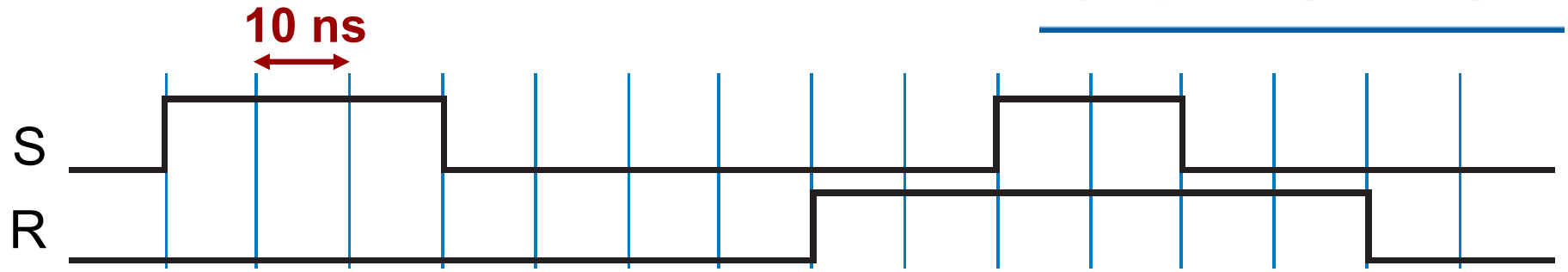

To be completed in class …

5 minutes

Overview: Sequential Logic Design Principles

* Introduction
* Bistable Elements
* Latches & Flip-Flops
* Analysis Procedure
* Design Procedure

Chapter 7 – "Digital Design: Principles and Practices" book

Flip-Flops

- **Level sensitive latches** are inadequate, because:
  - Output continually changes if input changes.
  - **Race conditions** can occur.
- Need a better approach to storing data!
  - We will consider both **D and JK-type flip-flops**.
- You can check the following URL for animated simulation of the various flip-flop types:

http://tams-www.informatik.uni-hamburg.de/applets/hades/webdemos/16-flipflops/10-srff/chapter.html

Master-Slave Flip-Flops

- **How Master-Slave Flip-Flops work**:
  - Employ two latches.
  - Isolate output from input:
    - *Output* cannot change continuously with *input*.
    - Input must have a *stable setup time*.

Master-Slave D Flip-Flop

- Very **popular design tool** (usually present in PLDs).
- Used extensively in designing ***registers***.
- Uses ***2 D Latches***:
  - *Master D Latch* to latch input.
  - *Slave D Latch* to latch output.
- Latches never operate together.
- Uses ***narrow pulse clocking*** approach.
- Eliminates racing conditions.

D Type Master-Slave Flip-Flop (1/5)

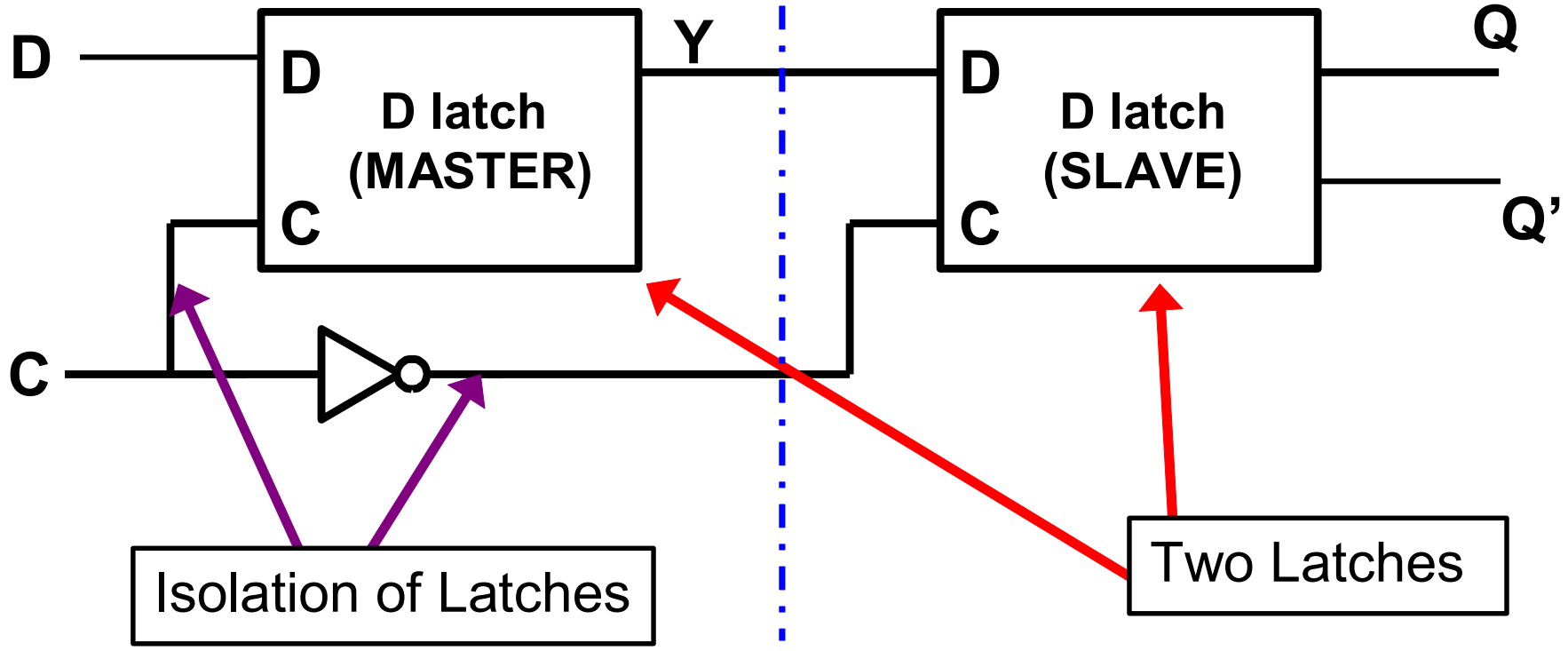

D Type Master-Slave Flip-Flop (2/5)

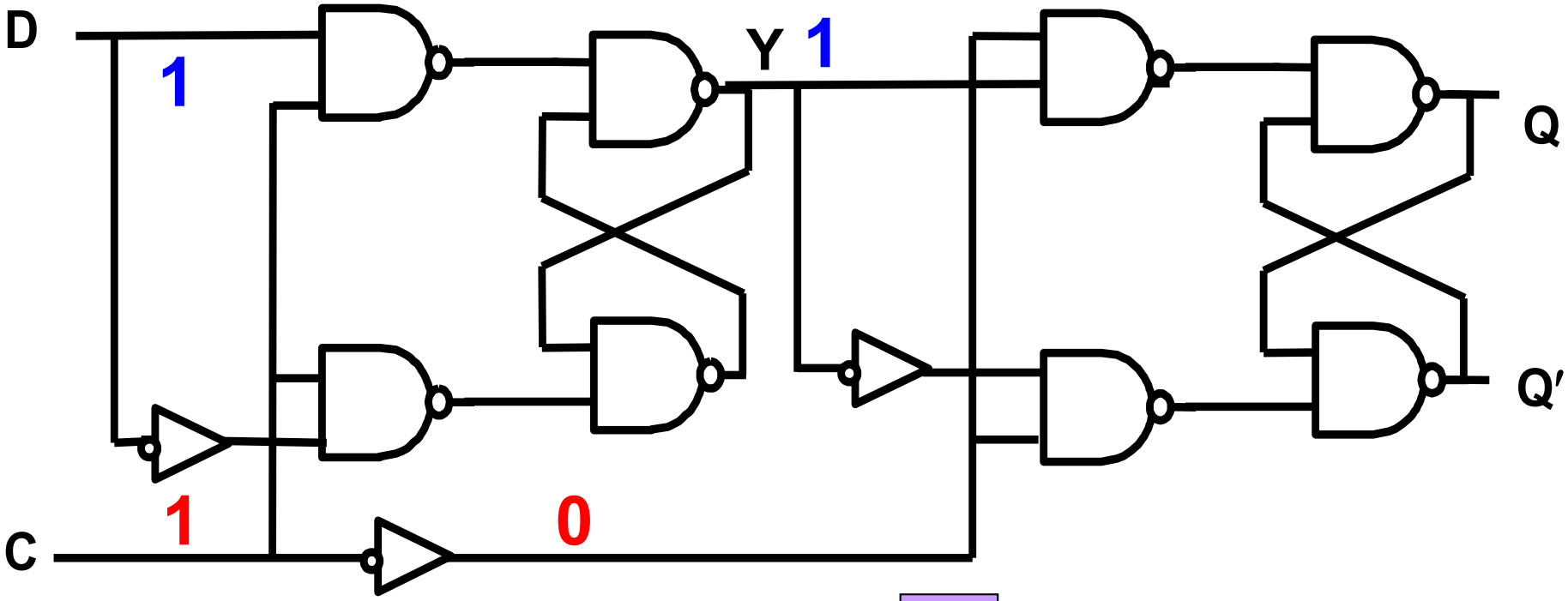

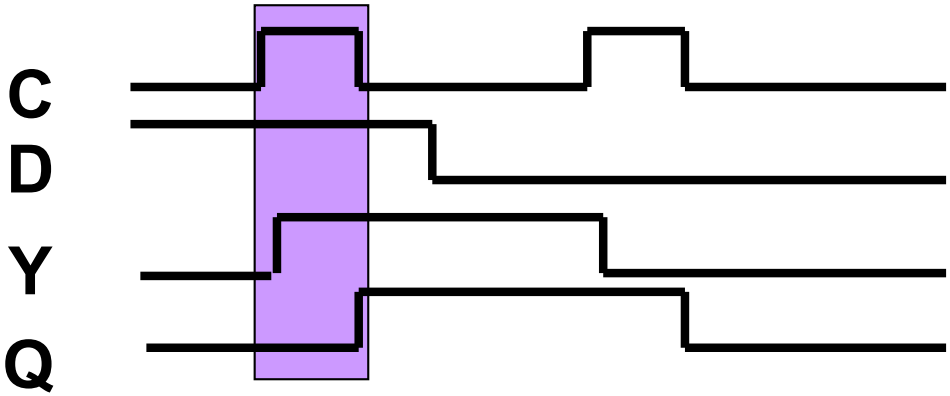

D Type Master-Slave Flip-Flop (3/5)

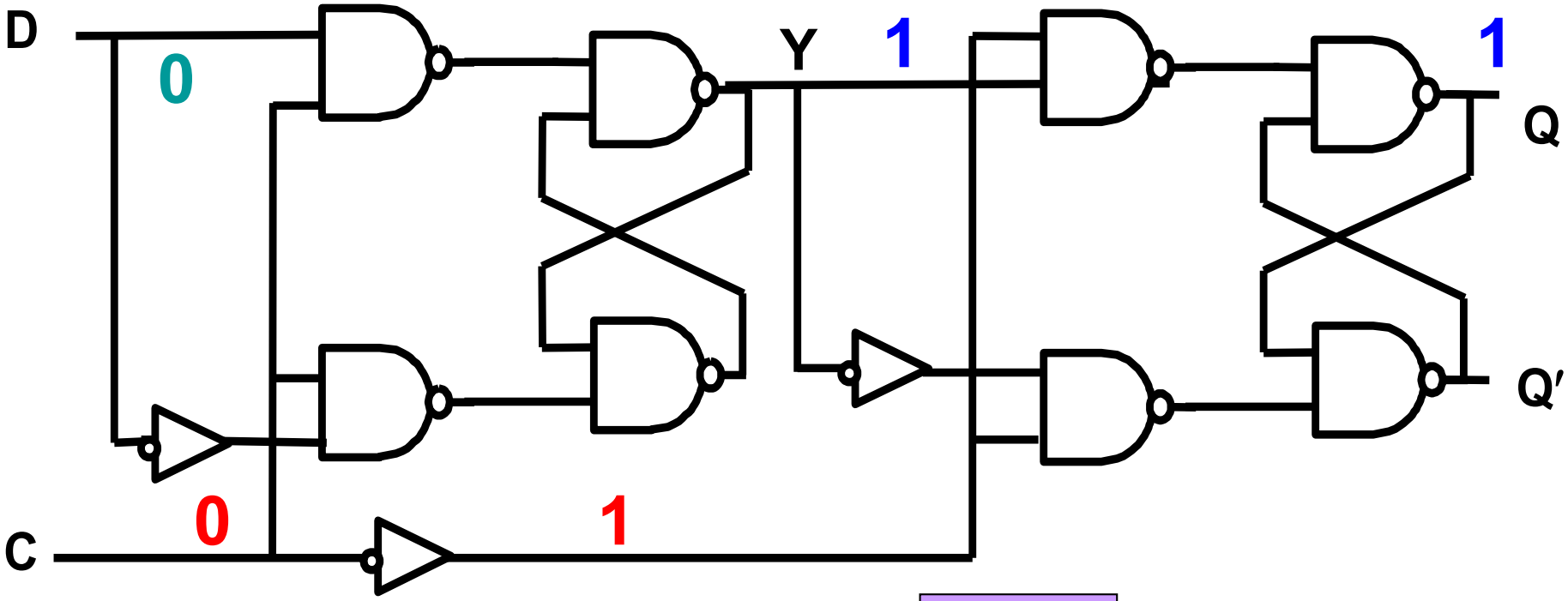

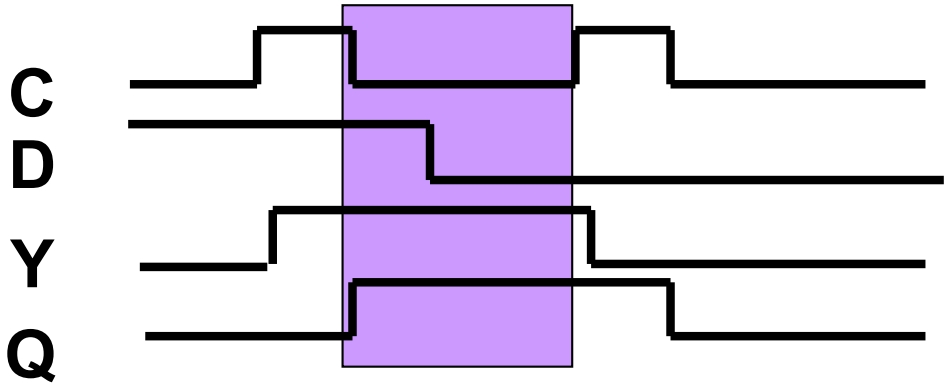

D Type Master-Slave Flip-Flop (4/5)

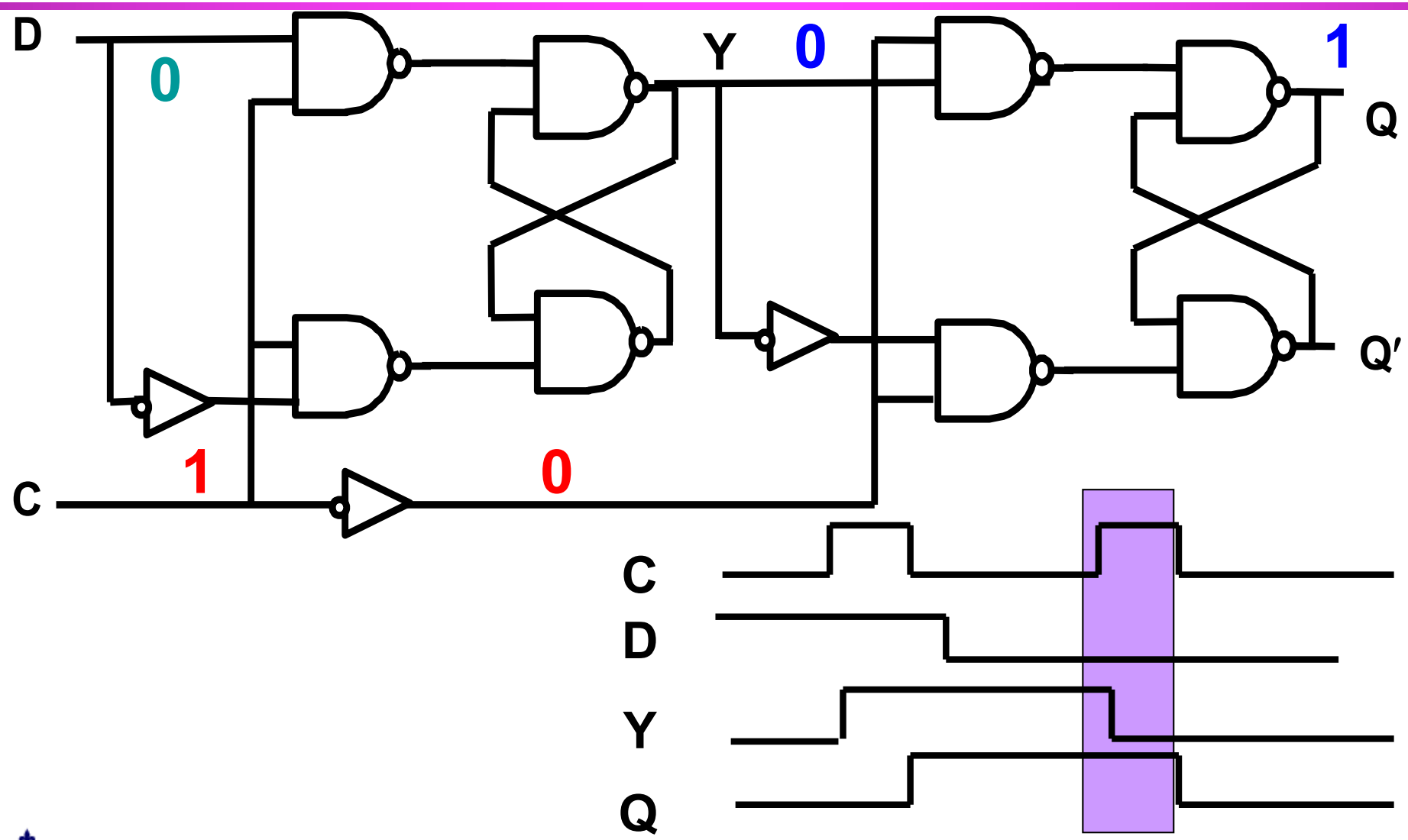

D Type Master-Slave Flip-Flop (5/5)

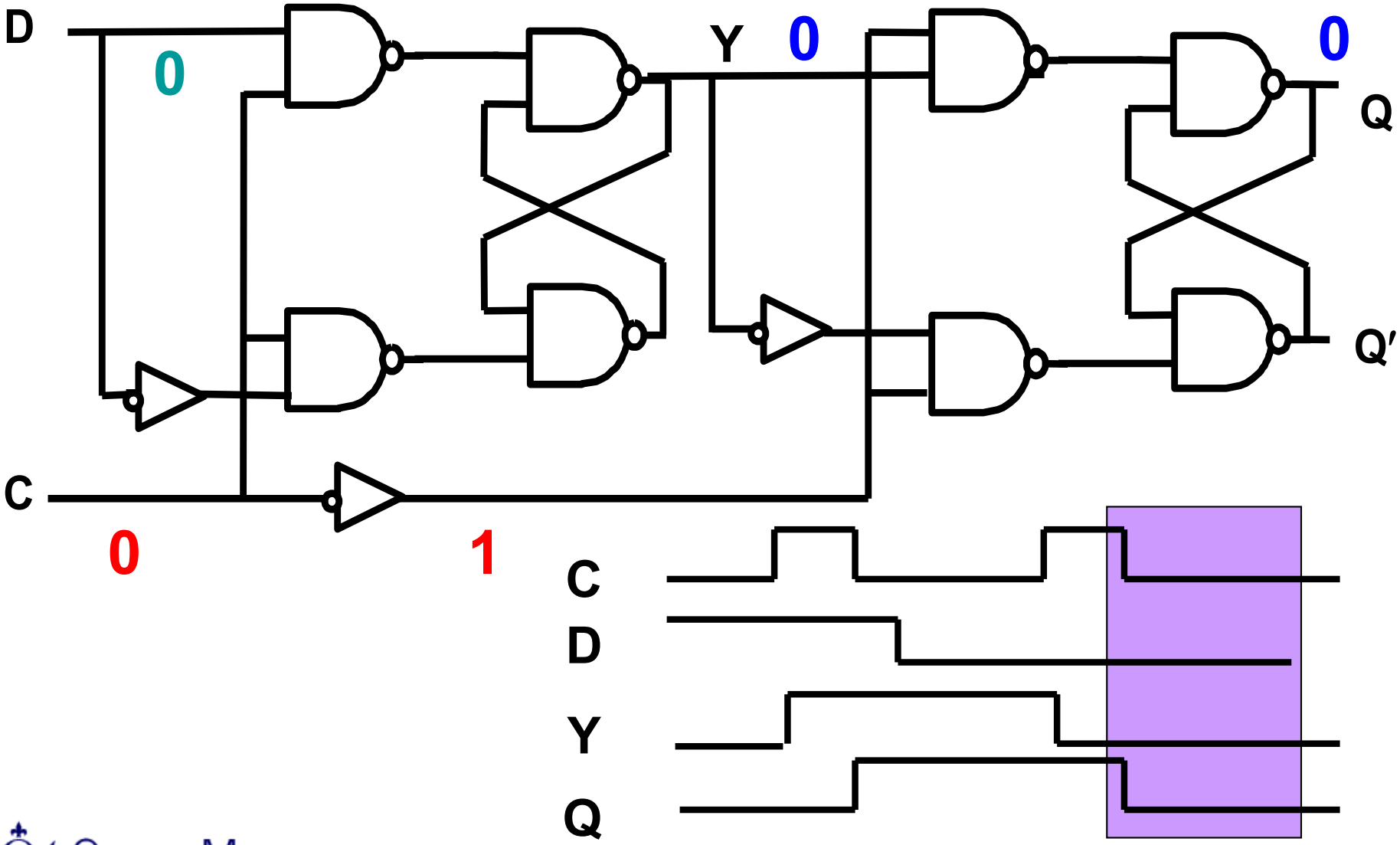

JK Flip-Flops

- **JK Flip-Flop**:
  - Uses 2 SR latches with control inputs.
    - The SR latch still has undesirable indeterminate next state (when ***S*** and ***R*** are both ***1***).
  - Adds *AND* gates to *S* and *R* inputs with feedback from the SR slave latch output.
    - Now when ***S*** and ***R*** inputs are ***1***, the output of the flip-flop merely complements.
  - Uses ***narrow pulse clocking*** approach.

Master-slave JK flip-flop

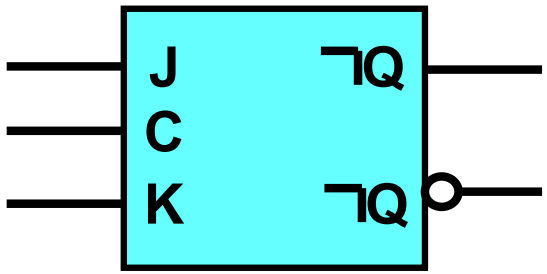

Minimum pulse width for inputs, to avoid going into a metastable state.

JK Type Master-Slave Flip-Flop

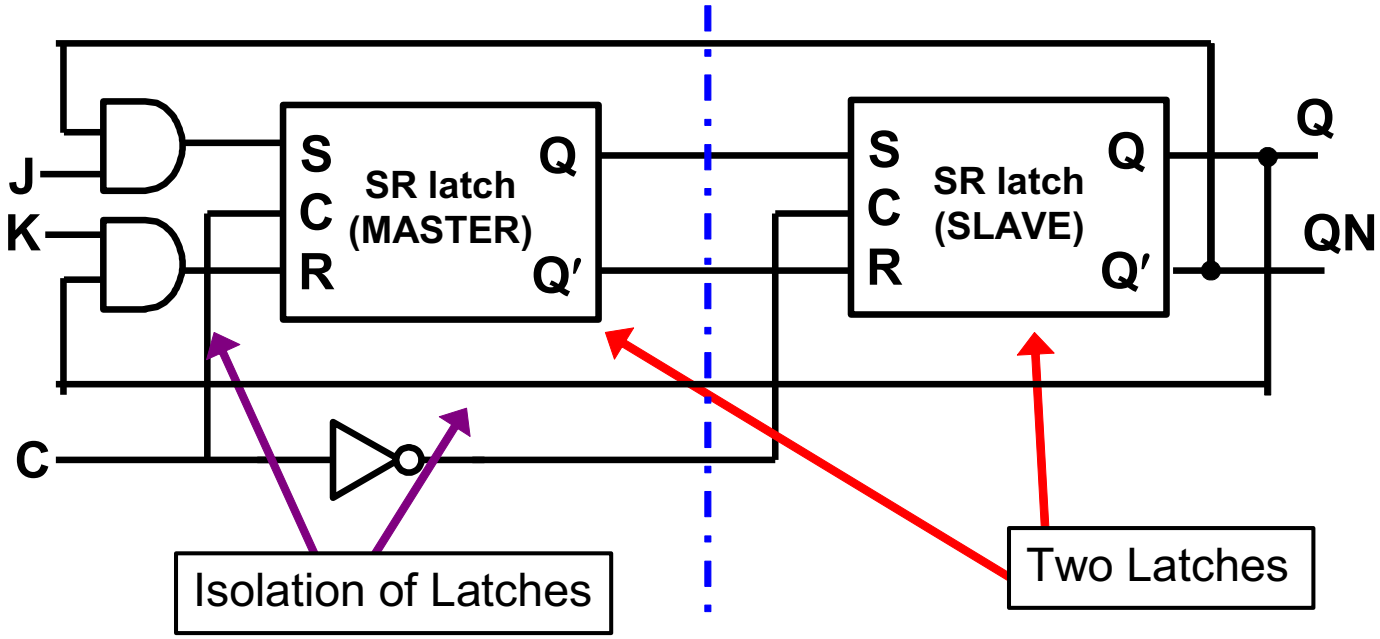

S	R	C	Q	QN
0	0	1	last Q	last QN
0	1	1	0	1
1	0	1	1	0
1	1	1	1	1
x	x	0	last Q	last QN

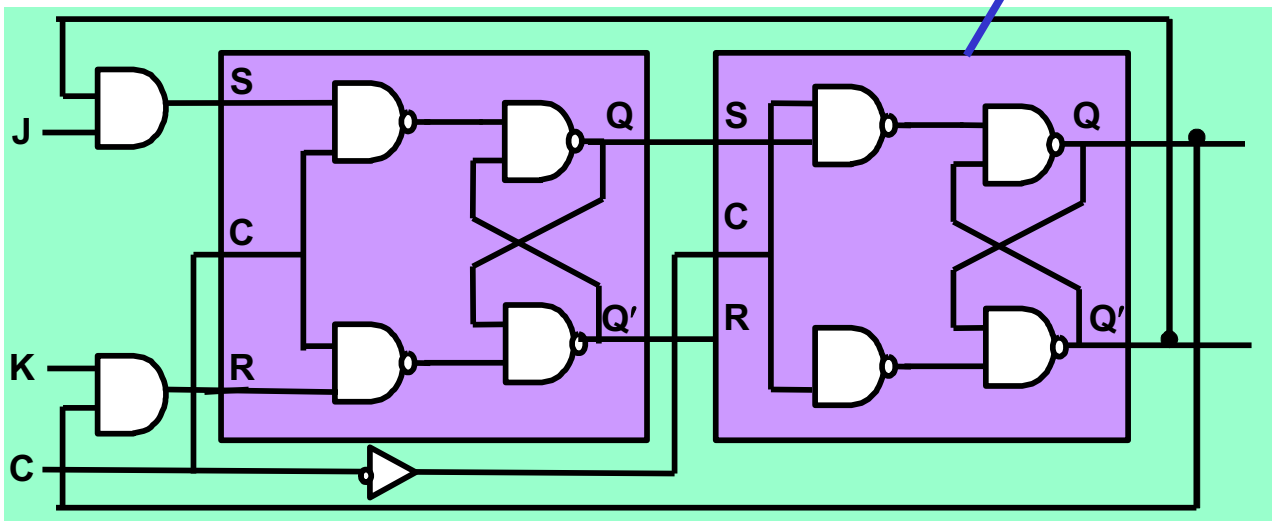

Queen Mary
University of London

Master-Slave JK Flip-Flop: *J=0*, *K=1* (1/2)

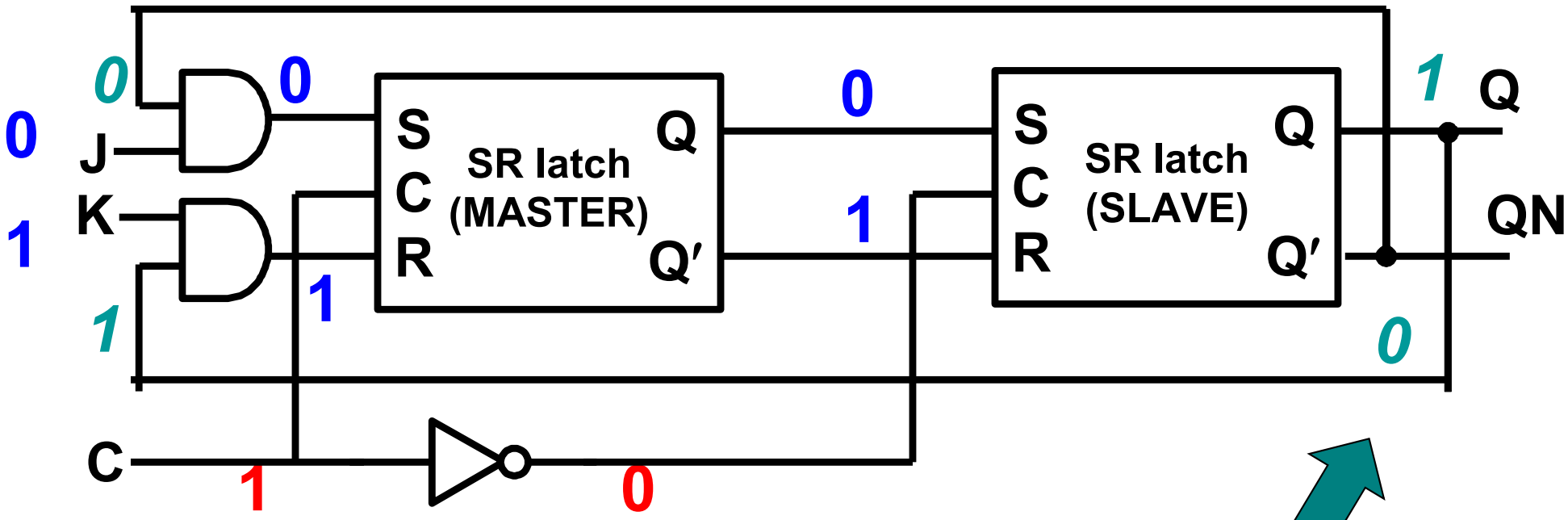

S	R	C	Q	QN
0	0	1	last Q	last QN
0	1	1	0	1
1	0	1	1	0
1	1	1	1	1
x	x	0	last Q	last QN

Last Q & QN

Master-Slave JK Flip-Flop: *J=0*, *K=1* (2/2)

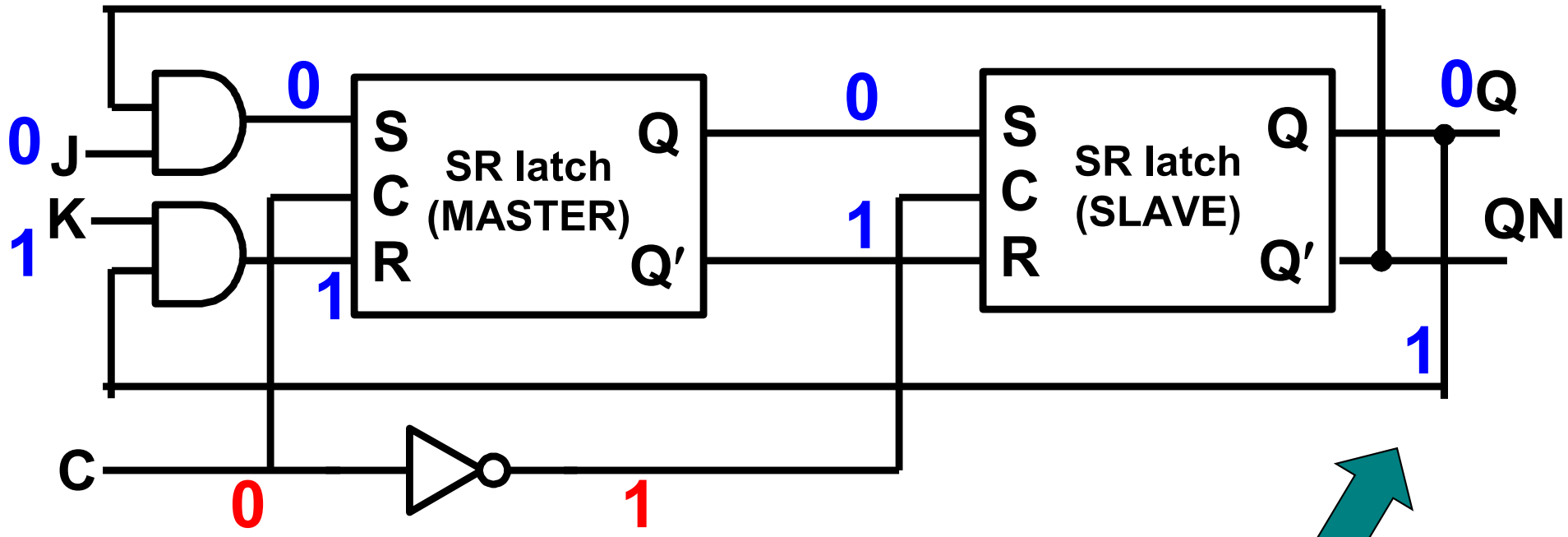

S	R	C	Q	QN
0	0	1	last Q	last QN
0	1	1	0	1
1	0	1	1	0
1	1	1	1	1
x	x	0	last Q	last QN

New Q & QN

Master-Slave JK Flip-Flop: *J=1*, *K=1* (1/2)

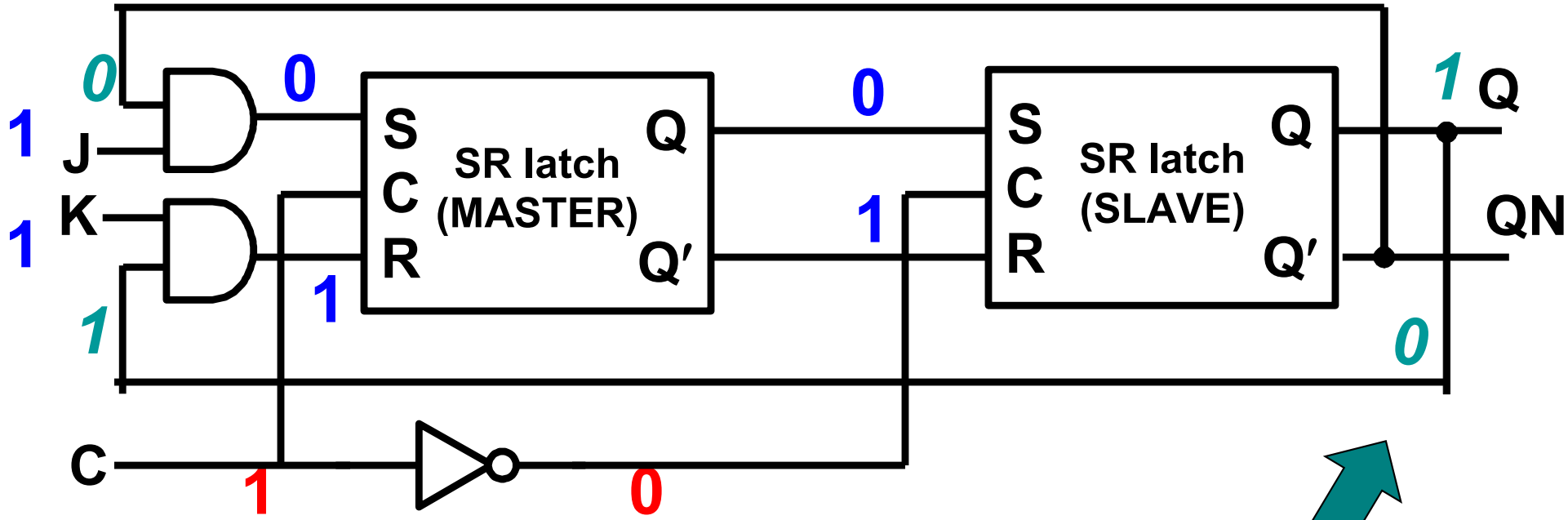

S	R	C	Q	QN
0	0	1	last Q	last QN
0	1	1	0	1
1	0	1	1	0
1	1	1	1	1
x	x	0	last Q	last QN

Last Q & QN

Master-Slave JK Flip-Flop: *J=1*, *K=1* (2/2)

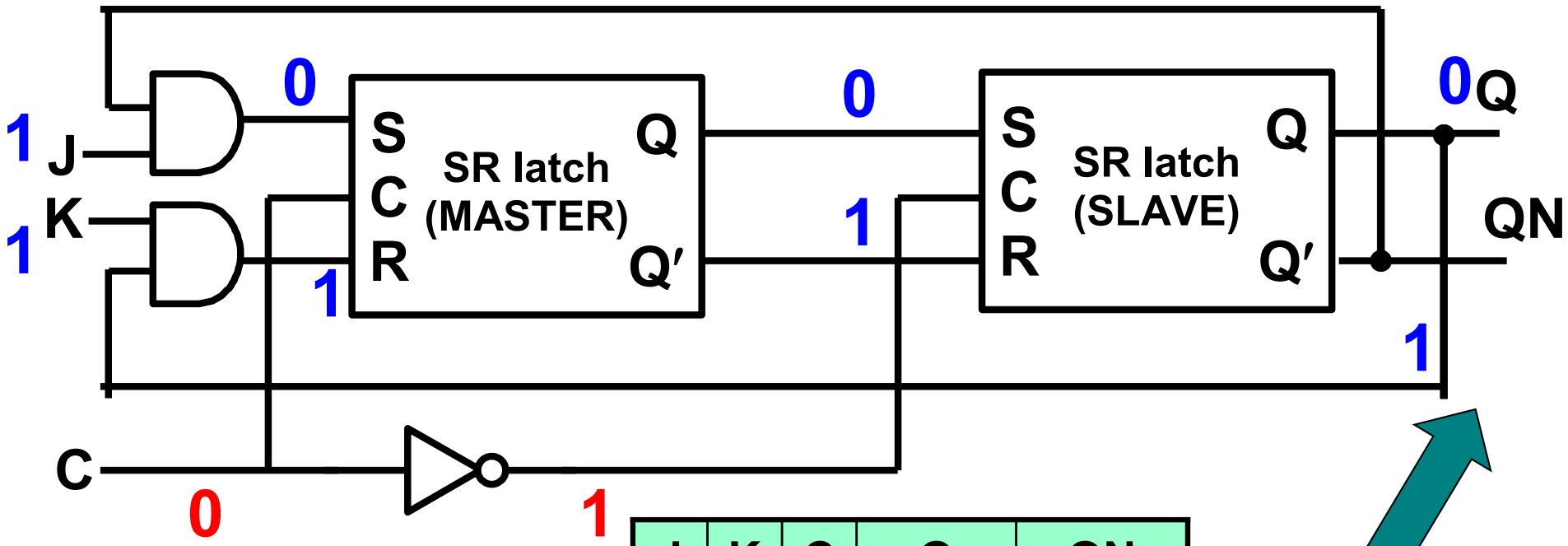

S	R	C	Q	QN
0	0	1	last Q	last QN
0	1	1	0	1
1	0	1	1	0
1	1	1	1	1
x	x	0	last Q	last QN

J	K	C	Q	QN
x	x	0		
0	0	⎍		
0	1	⎍		
1	0	⎍		
1	1	⎍		

New Q & QN

Queen Mary
University of London

Master-Slave JK Flip-Flop: Problems

- If inputs ***J*** and ***K*** are not held valid during the entire period when CLK is active for the master, the above flip-flop exhibits *1's* and *0's* **catching behaviour**.
  - ***1's Catching***: Output changes to *1* even though *K* and not *J* is asserted at the end of the triggering pulse.
  - ***0's Catching***: Output changes to *0* even though *J* and not *K* is asserted at the end of the triggering pulse.

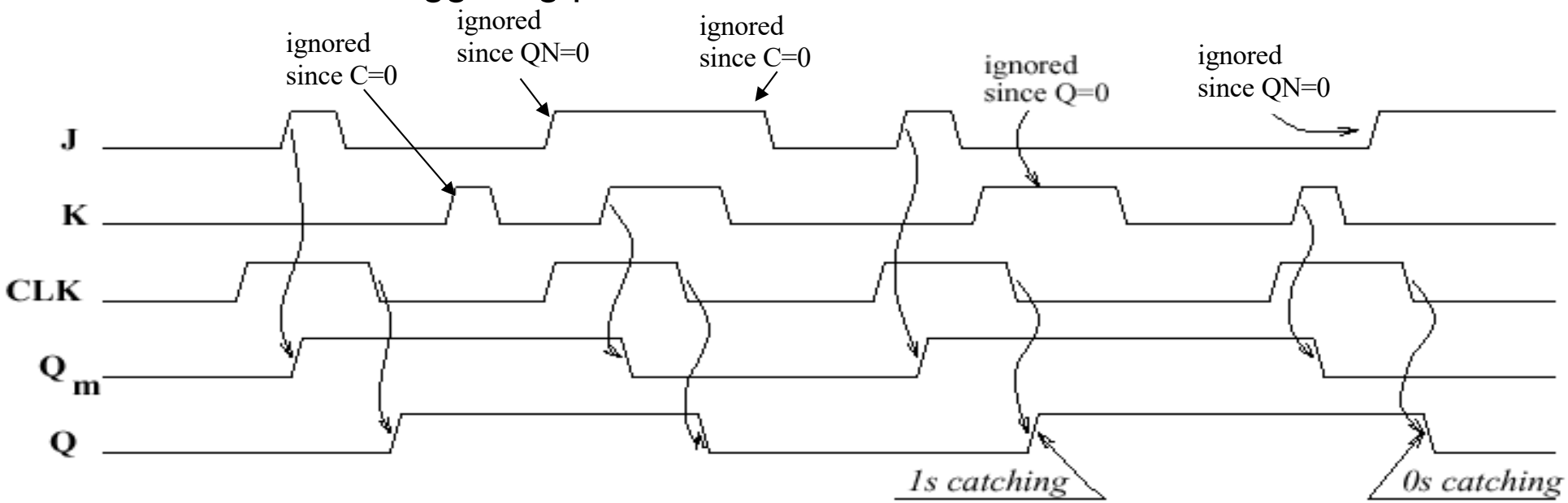

Edge-Triggered Flip-Flops

- ***Edge-triggered flip-flops***:
  - **Ignore inputs** while the clock pulse is at a constant level.
  - Only **set outputs** on clock pulse transitions.
    - *Negative* or *positive edges:*

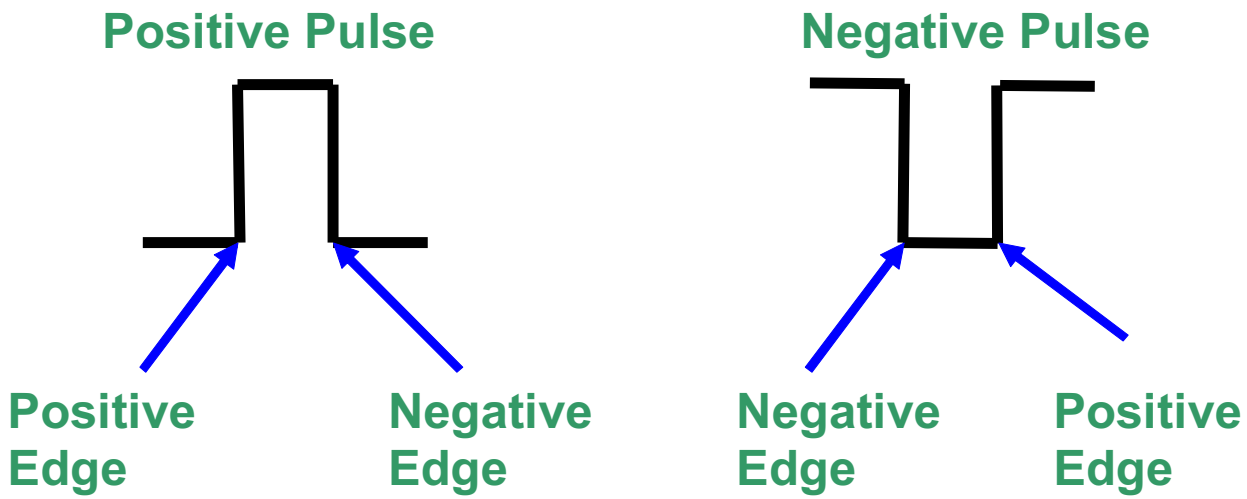

  - For **positive triggered flip-flops**, the value at the ***D*** input is transferred to ***Q*** on a positive transition.

Positive Edge-Triggered D Flip-Flop

D	CLK	Q	QN
0	↑	0	1
1	↑	1	0
x	0	last Q	last QN
x	1	last Q	last QN

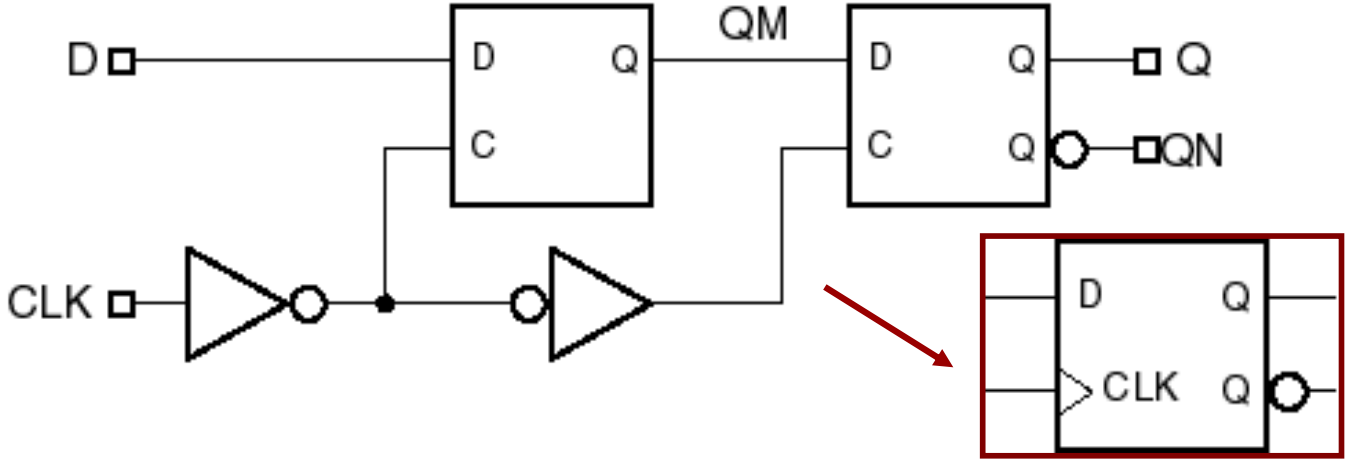

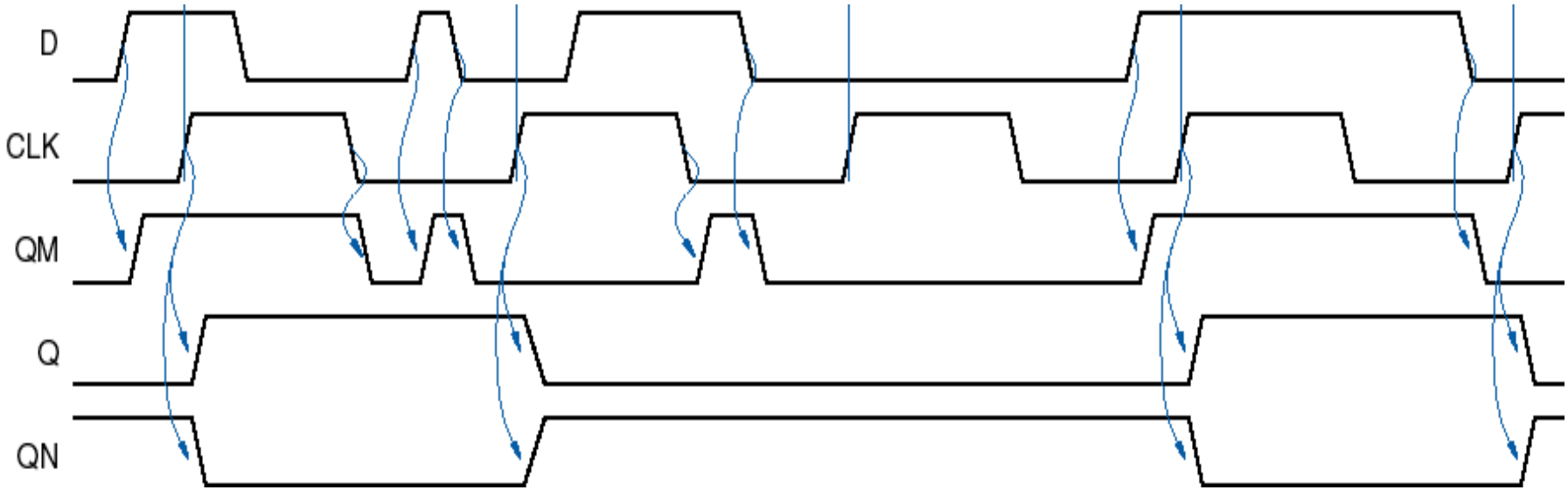

D Flip-Flop: Timing Parameters

- Timing parameters:
  - **Propagation delay** (from CLK).
  - **Setup time** (*D* before CLK).
  - **Hold time** (*D* after CLK).

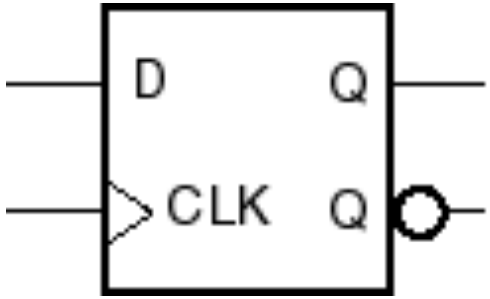

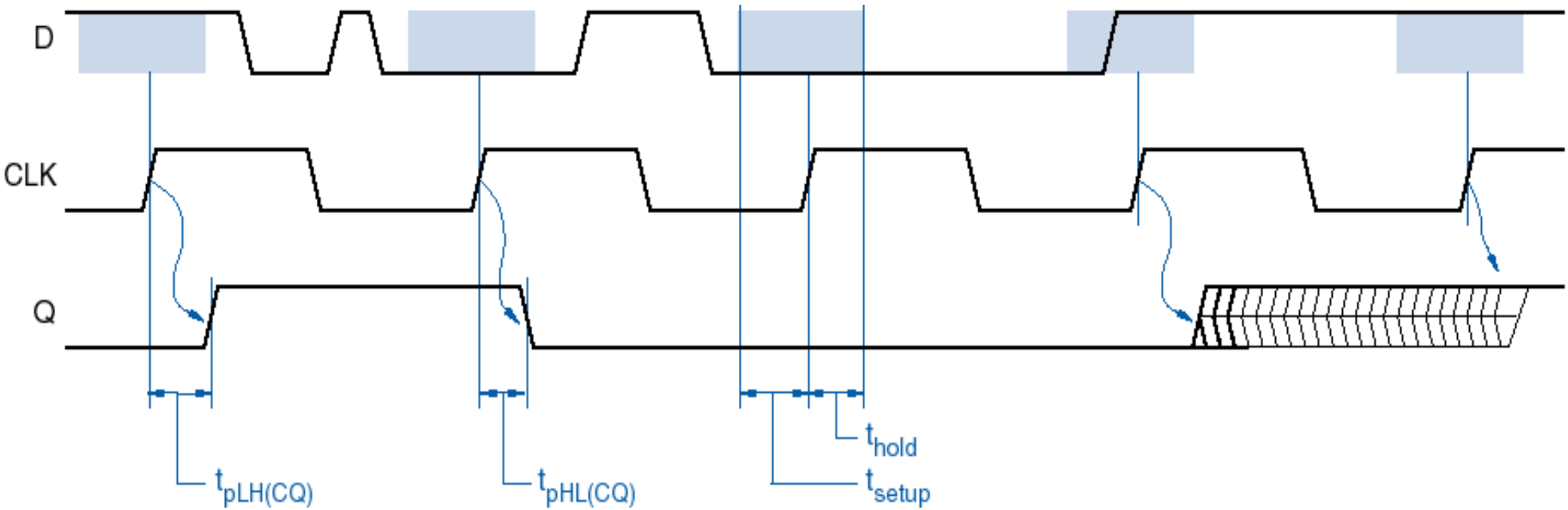

Other D Flip-Flop Variations

- ***Negative-edge triggered***: By inverting the clock input, all the action takes place on the falling edge of CLK_L (active low).
- It is the same as the first *master-slave flip-flop* we looked at!

D	CLK_L	Q	QN
0	↓	0	1
1	↓	1	0
x	0	last Q	last QN
x	1	last Q	last QN

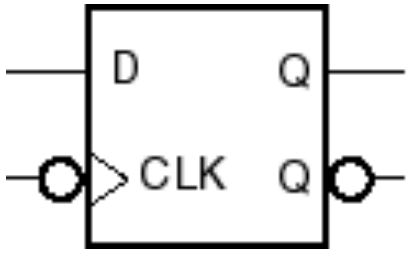

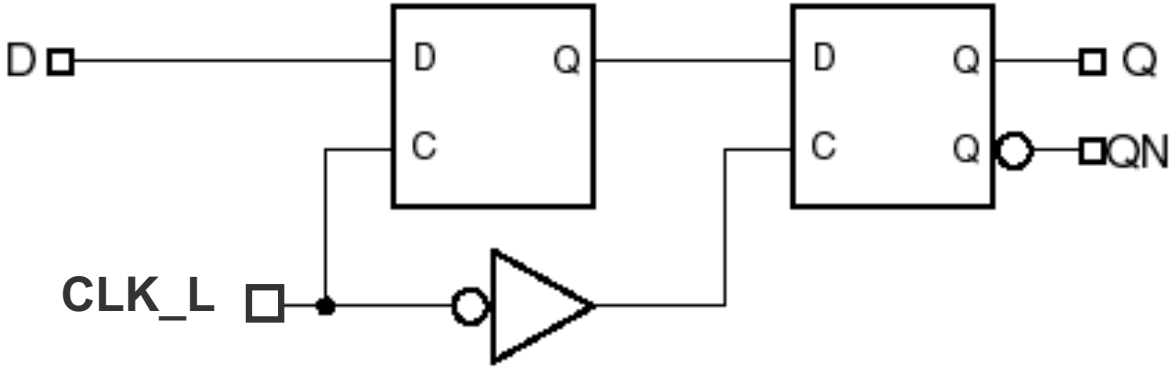

Edge Triggered JK Flip-Flop

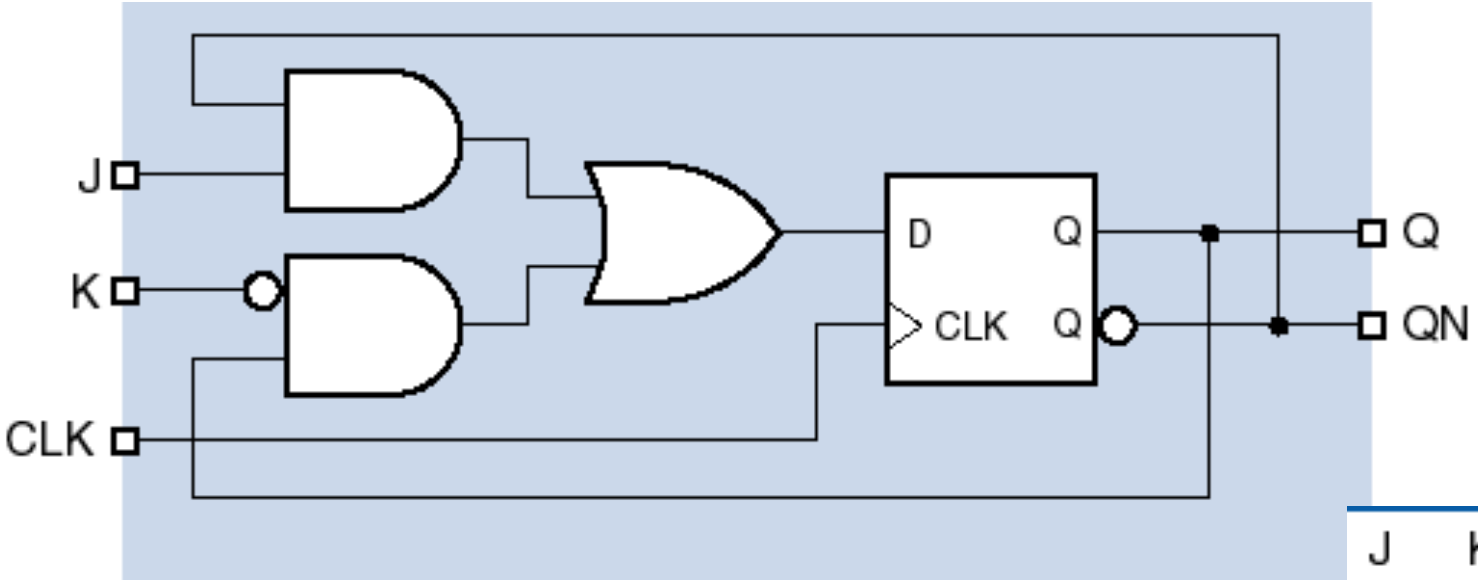

J	K	CLK	Q	QN
x	x	0	last Q	last QN
x	x	1	last Q	last QN
0	0	↑	last Q	last QN
0	1	↑	0	1
1	0	↑	1	0
1	1	↑	last QN	last Q

Solves the 1's and 0's catching problem of the master-slave!

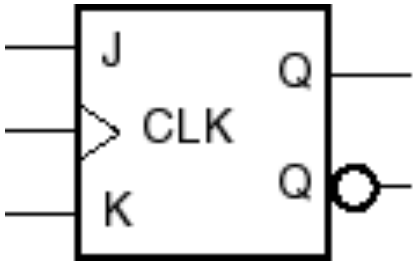

Toggle flip-flop (T-Flip-Flop)

- A T (toggle) flip-flop (**T-Flip-Flops**) changes state on every tick of the clock.

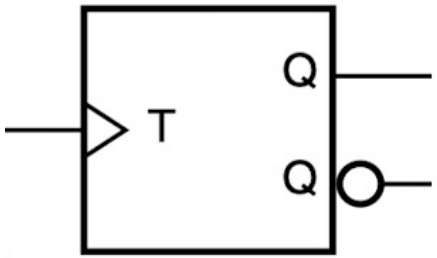

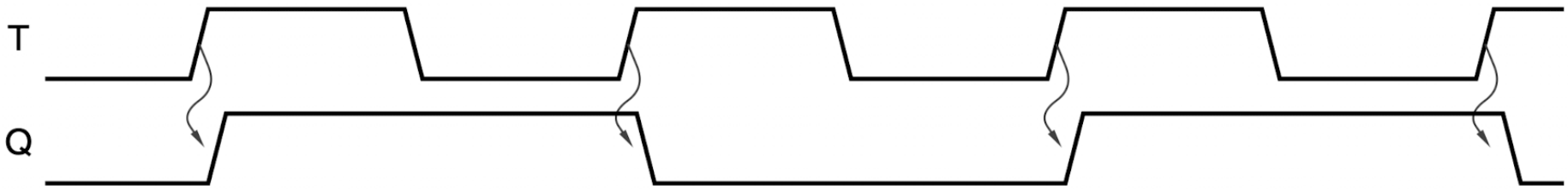

Toggle flip-flop (T-Flip-Flop)

- In many applications of T flip-flops, the flip-flop need not be toggled on every clock tick. Such applications can use a **T flip-flop with enable**.
- The flip-flop changes state at the triggering edge of the clock only if the enable signal EN is asserted.
- the EN input must meet specified setup and hold times with respect to the triggering clock edge.

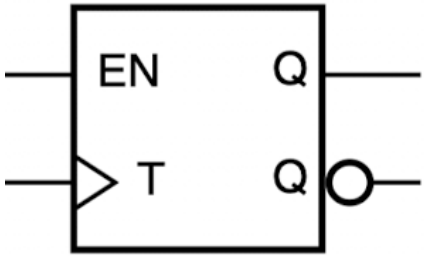

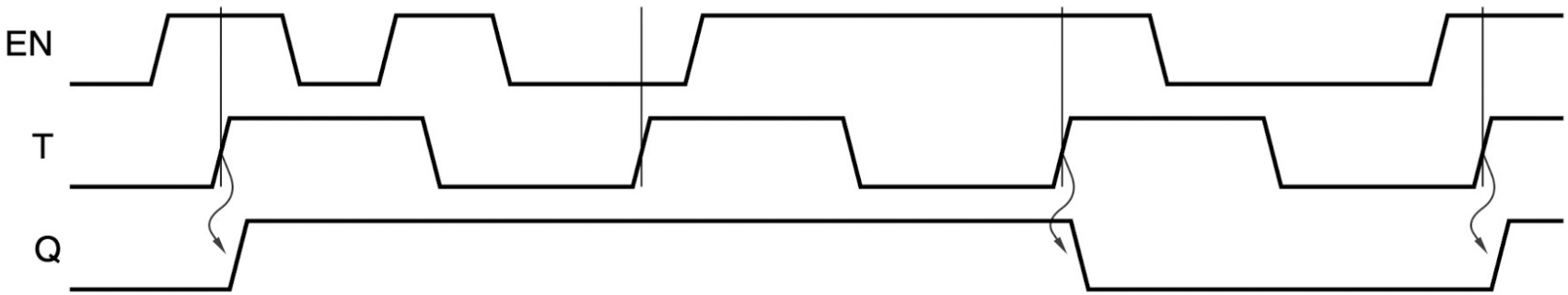

Toggle flip-flop (T-Flip-Flop)

- The D-type flip-flop can be converted to a T flip-flop by connecting the Q' output directly to the D-input with the toggling signal **T being the clock input**. So, when the D flip-flop is triggered by the clock (T=1), the next Q output will be the **complement of the current Q**.

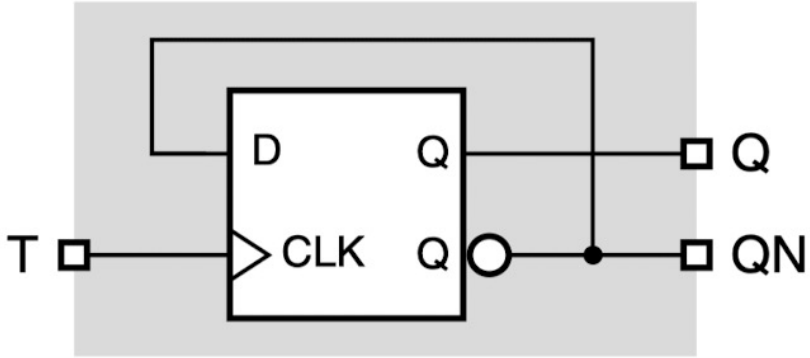

D Flip-flop Conversion

Toggle flip-flop (T-Flip-Flop)

- The JK flip-flop can be converted to a toggle flip-flop by connecting both the J and K inputs together to a high logic level signal, the output **changes state or toggles.**

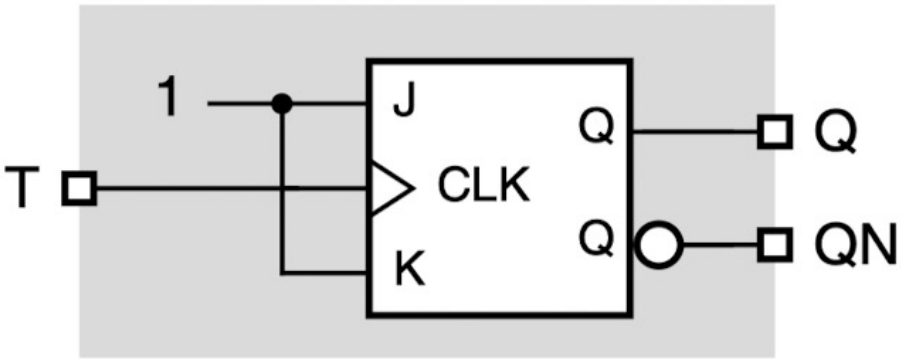

Toggle flip-flop (T-Flip-Flop)

- The JK flip-flop can be converted to a toggle flip-flop by connecting both the J and K inputs together. So, when both J and K are 0 (T=0), we have **last Q** as the output and when both J and K are 1, the output **changes state.**

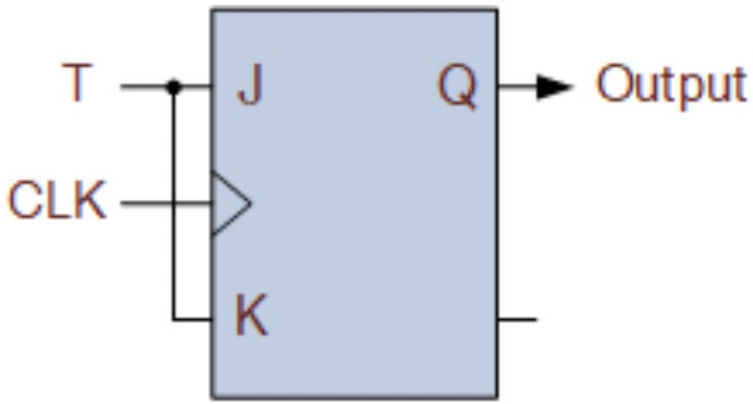

JK-Type Flip-flop Conversion

CLK	T	Q	Q*
_↑⁻	0	0	0
_↑⁻	0	1	1
_↑⁻	1	0	1
_↑⁻	1	1	0

Equivalent to

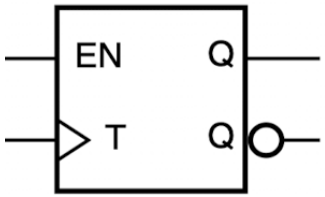

Applications of Flip-Flops (1/2)

- **Parallel Data Storage**:
  - In digital systems, data is normally stored in groups of bits to represent e.g., numbers or codes.
  - We can take several bits of data on parallel lines and store them simultaneously in a group of flip-flops (**Register**).

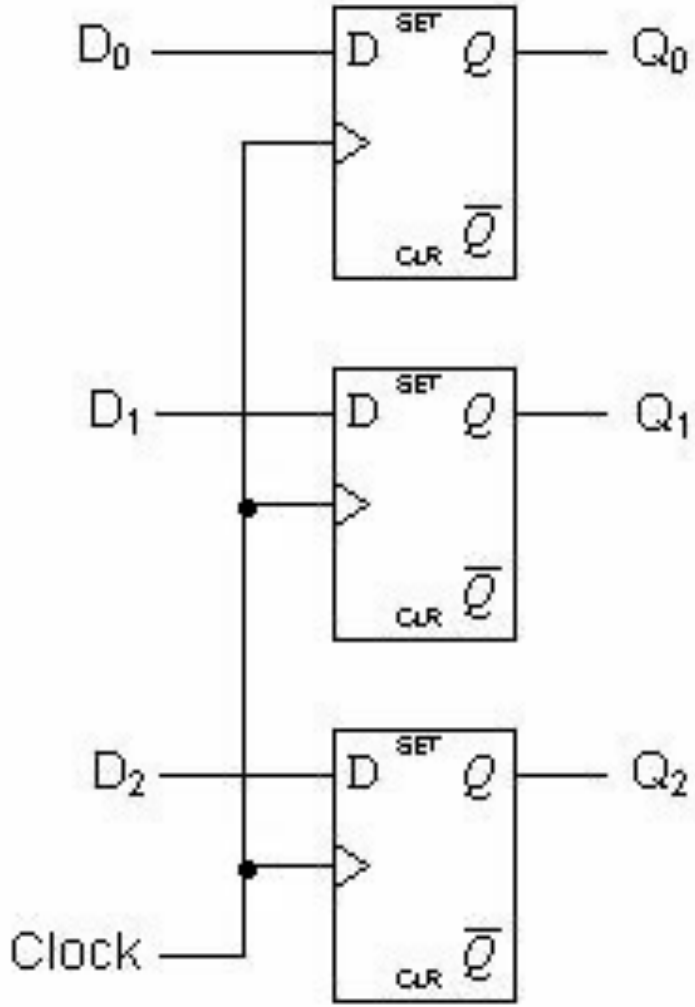

Applications of Flip-Flops (2/2)

- **Digital Counters**:
  - The 2-bit binary sequence is repeated every *4* clock pulses.
  - When it reaches the value *3*, it resets back to *0* and the sequence begins again.

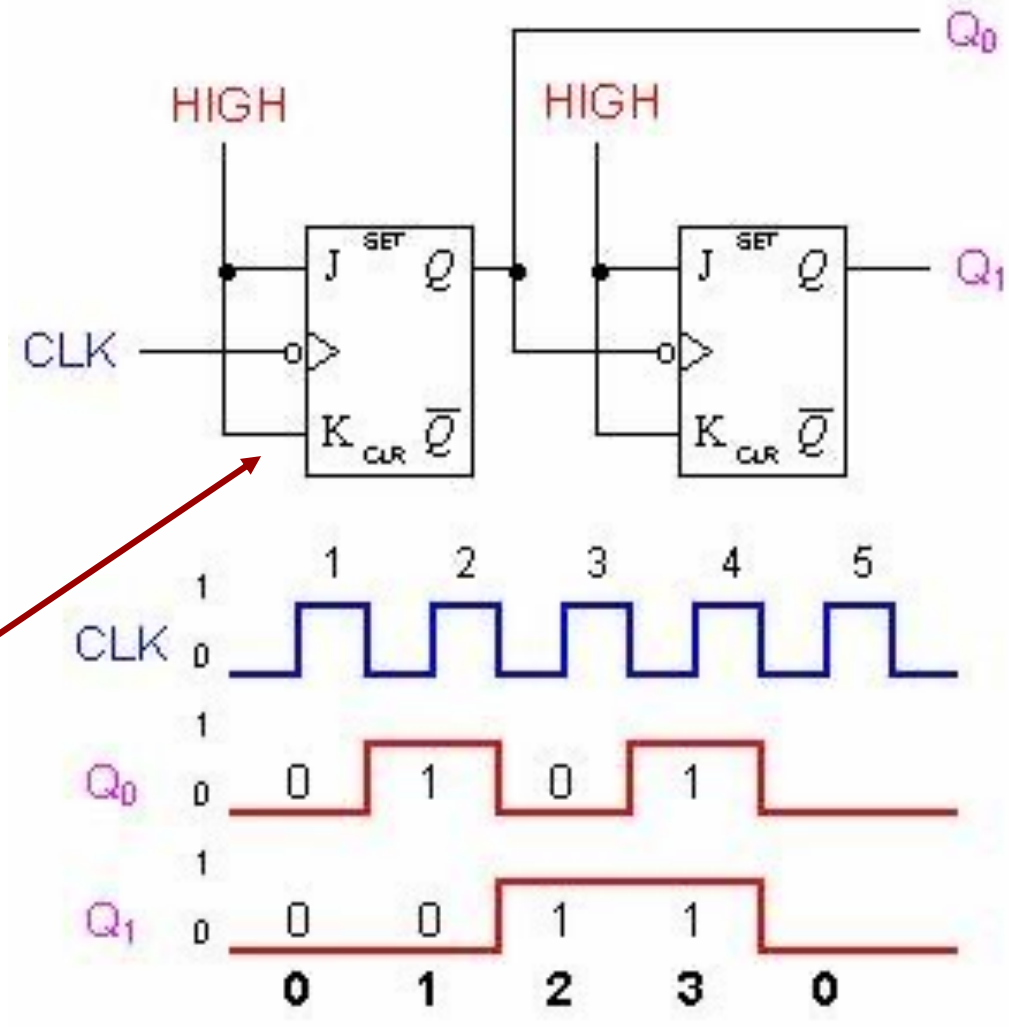
HIGH
HIGH
Q_0
Q_1
CLK
J
SET
Q
K
CLR
$\overline{Q}$
1
2
3
4
5
CLK
Q_0
Q_1
0
1
0
1
0
1

Task 2

- Determine the output states for the flip-flop below, given the pulse inputs shown.

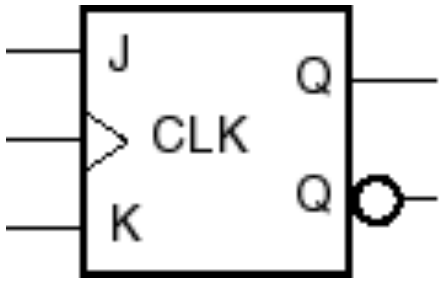

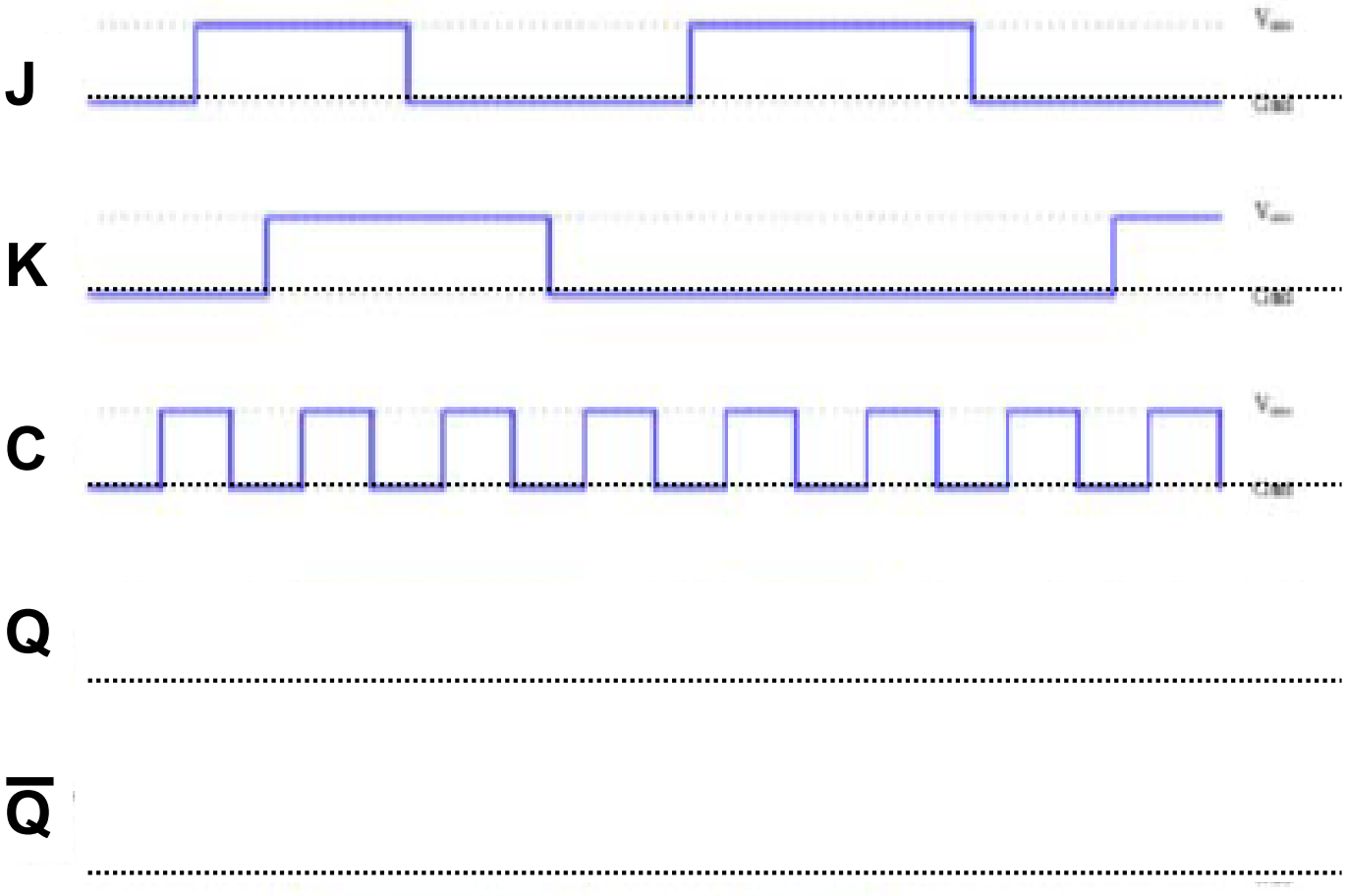

To be completed in class …

5 minutes