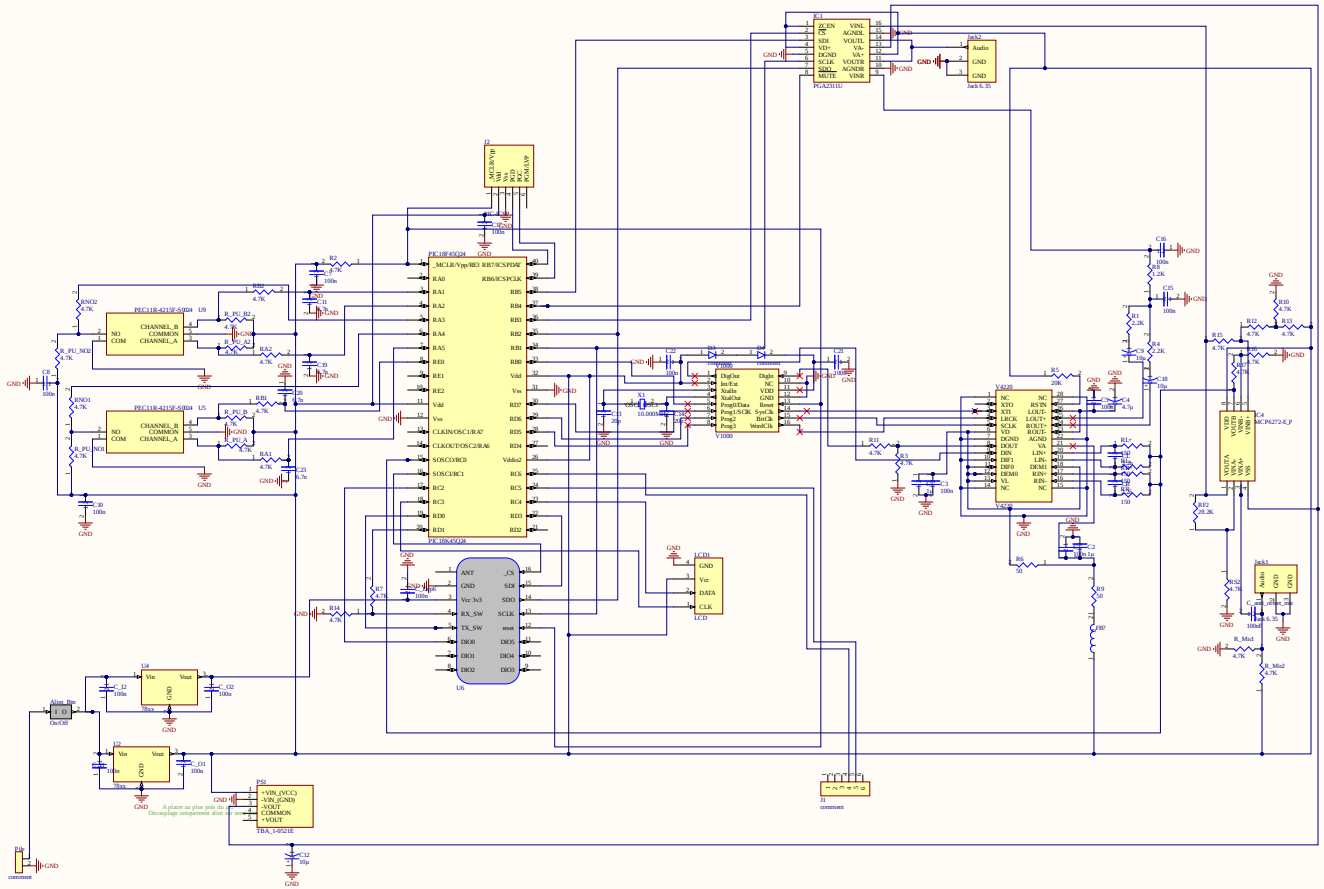

Title			
Size	Number		Revision
A1			
Date:	6/13/2025	Sheet of	
File:	C:\Users\...\Micro_Schematic.SchDoc	Drawn By:	

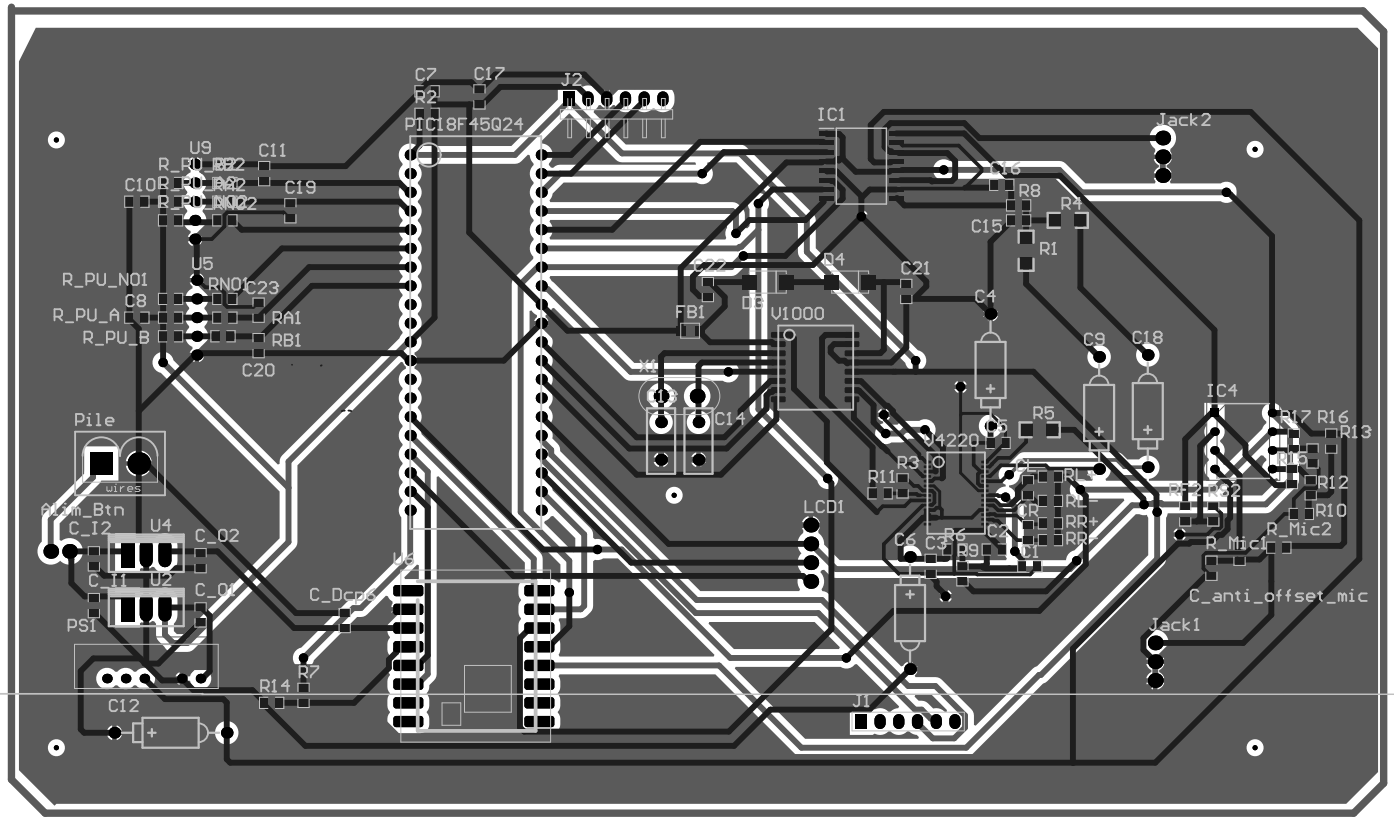
C7
C17
J2
R2
PIC18F45Q24
IC1
Jack2
U9
C11
C10
C19
R8
R4
C15
R1
U5
R_PU_NO1
RN01
C23
C8
R_PU_A
RA1
R_PU_B
RB1
C20
C22
Q4
C21
C4
FB1
D3
VI000
C9
C18
IC4
Pile
wires
C14
R5
U4220
R17
R16
R13
R3
R11
R12
R10
Alarm_Btn
C_I2
U4
C_O2
LCD1
R_Mic2
C_I1
U2
C_O1
C6
C3
R6
R9
R_Mic1
C_Dcps
C_anti_offset_mic
PS1
Jack1
R7
R14
C12
J1