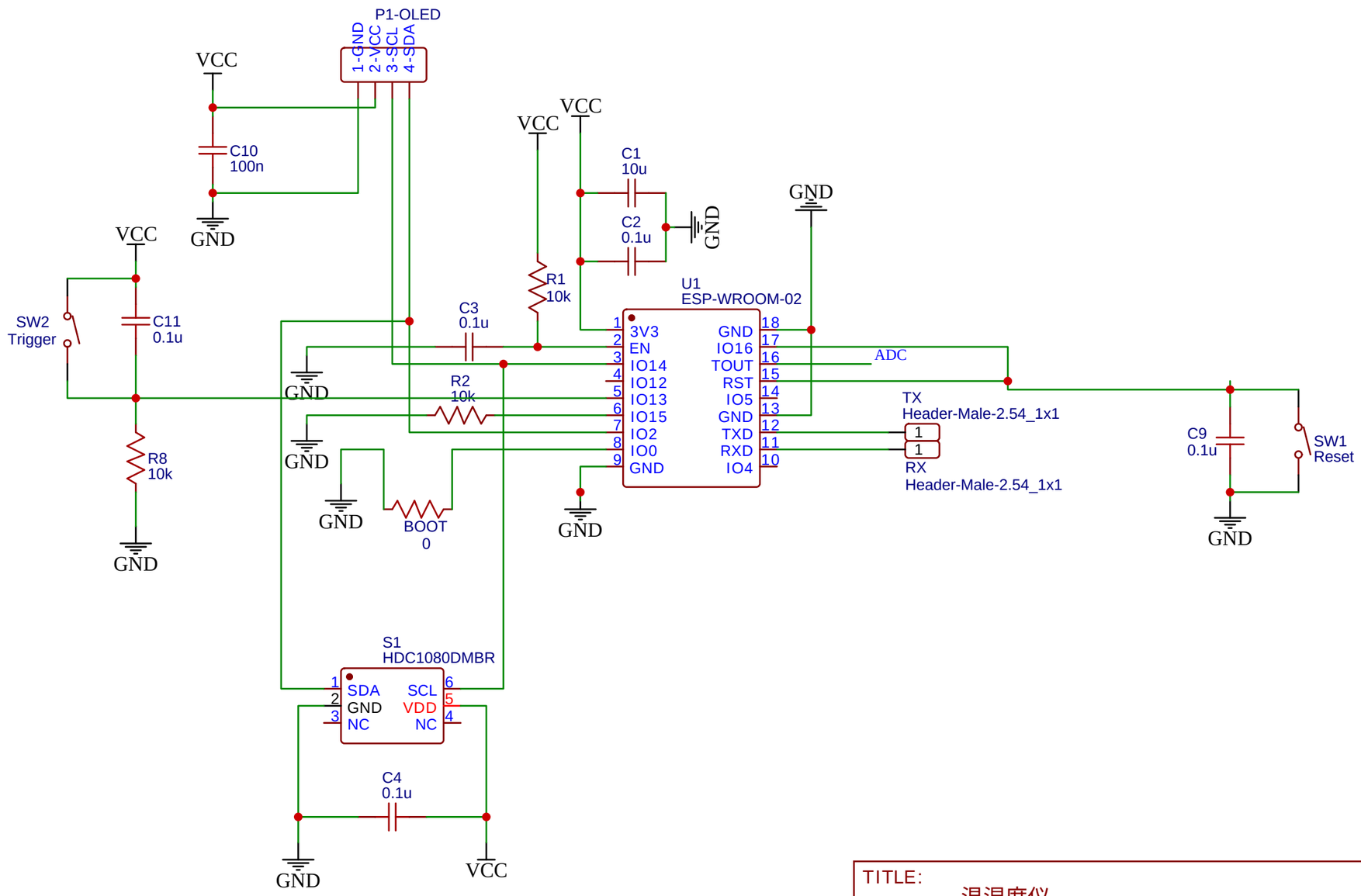

TITLE: 温湿度仪	REV: 1.0
立创EDA Company:	Sheet: 1/1
Date: 2019-11-24 Drawn By: Hallows	

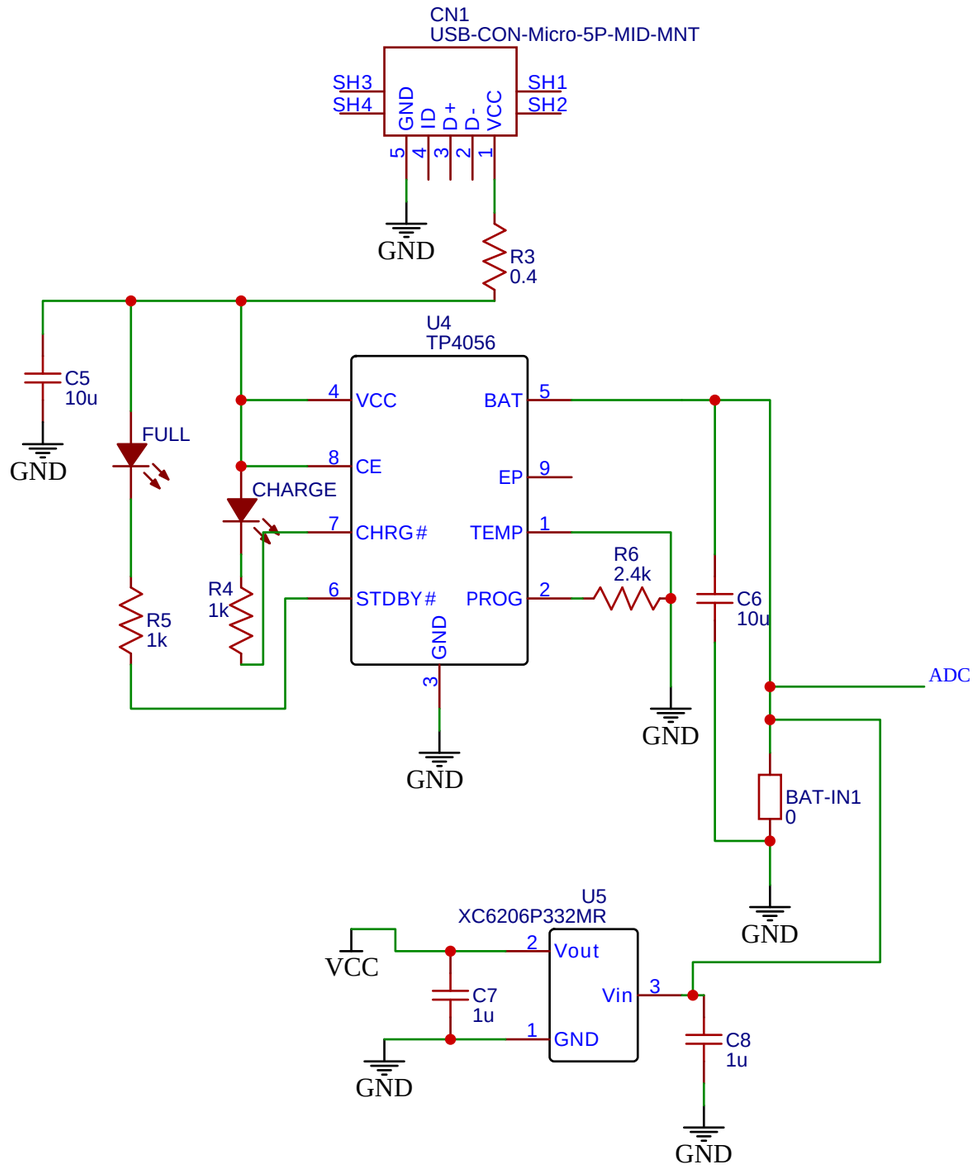

TITLE: Sheet_2		REV: 1.0
立创EDA	Company: Your Company	Sheet: 1/1
	Date: 2019-12-04 Drawn By: Hallows	