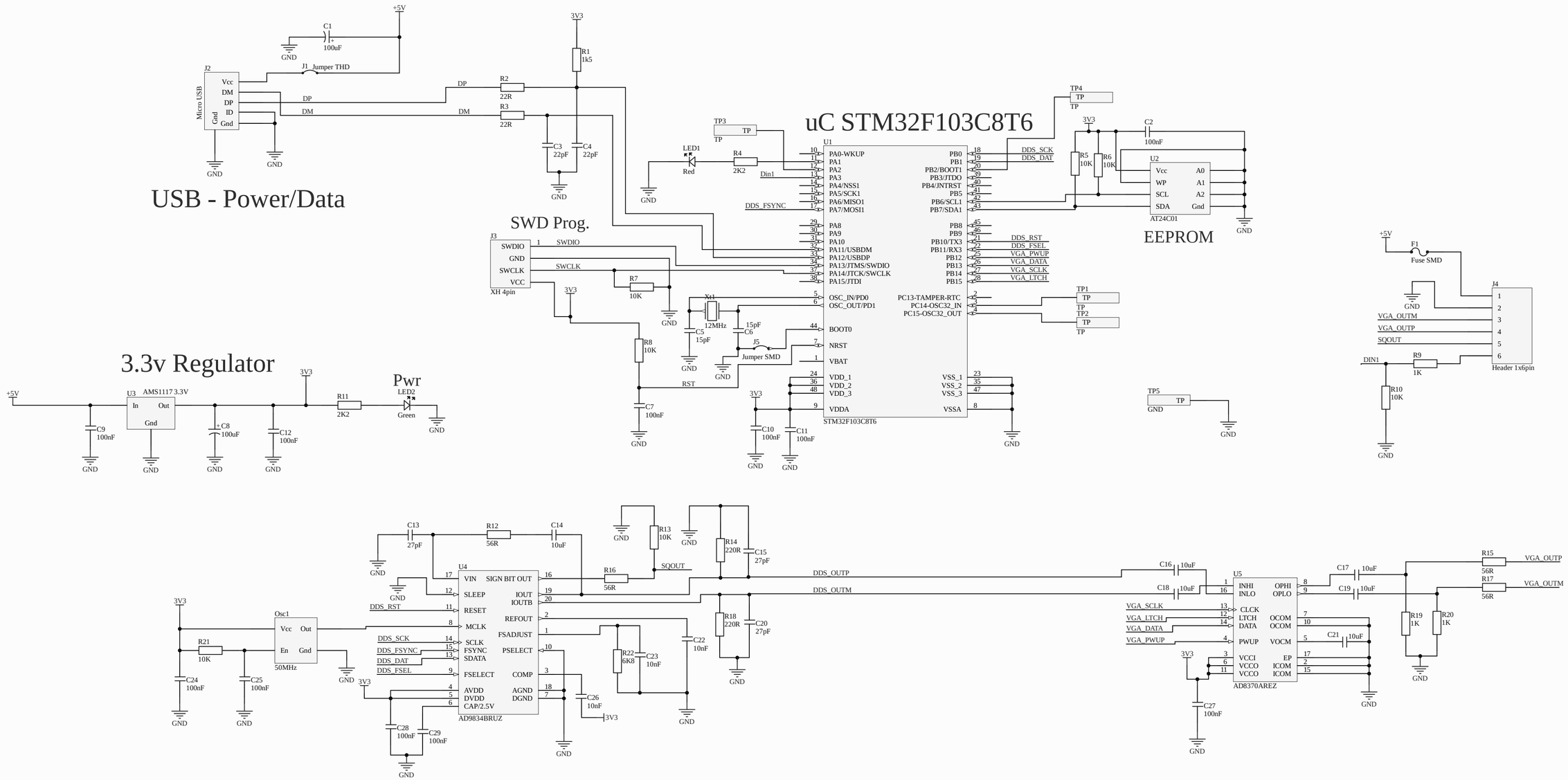

Title		
Size A2	Number	Revision
Date: 4/26/2021		Sheet of
File: D:\Signal Generator\..\SigGen.SchDoc		Drawn By: