BANGLADESH UNIVERSITY OF ENGINEERING AND TECHNOLOGY
DEPARTMENT OF ELECTRICAL AND ELECTRONIC ENGINEERING

EEE 304 (July 2023)

Digital Electronics Laboratory

Final Project Report

Section: C2 Group: 06

4 Digit Smart Door Lock System

Course Instructors:

Khairul Islam, Lecturer
Md. Mehrab Hossain, Lecturer

Signature of Instructor: _____

Academic Honesty Statement:

IMPORTANT! Please carefully read and sign the Academic Honesty Statement, below. Type the student ID and name, and put your signature. *You will not receive credit for this project experiment unless this statement is signed in the presence of your lab instructor.*

"In signing this statement, We hereby certify that the work on this project is our own and that we have not copied the work of any other students (past or present), and cited all relevant sources while completing this project. We understand that if we fail to honor this agreement, We will each receive a score of ZERO for this project and be subject to failure of this course."

Signature: _____ **Full Name:** **Student ID: 2006167**	**Signature:** _____ **Full Name:** **Student ID: 2006168**
Signature: _____ **Full Name:** **Student ID: 2006175**	**Signature:** _____ **Full Name:** **Student ID: 2006179**

Table of Contents

1 Abstract 1

2 Introduction 1

3 Design 2

3.1 Problem Formulation 2

3.1.1 Identification of Scope 2

3.1.2 Literature Review 3

3.1.3 Formulation of Problem 5

3.1.4 Analysis 6

3.2 Circuit Diagram 9

3.3 Simulation Model 11

3.5 Hardware Design 112

4 Implementation 13

4.1 Description 13

4.2 Experiment and Data Collection 13

4.3 Data Analysis 14

4.4 Results 14

5 Design Analysis and Evaluation 15

5.1 Novelty 15

5.2 Design Considerations 15

5.2.1 Considerations to public health and safety 15

5.2.2 Considerations to environment 15

5.2.3 Considerations to cultural and societal needs 15

5.3 Investigations 16

5.3.1 Literature Review 16

5.3.2 Experiment Design 16

5.3.3 Data Analysis and Interpretation 16

5.4 Limitations of Tools 16

5.5 Impact Assessment 16

5.5.1 Assessment of Societal and Cultural Issues 16

5.5.2 Assessment of Health and Safety Issues 17

5.5.3 Assessment of Legal Issues 17

5.6 Sustainability and Environmental Impact Evaluation 17

5.7 Ethical Issues 17

6 Reflection on Individual and Team work 18
6.1 Individual Contribution of Each Member 18
7 Communication 18
7.1 Executive Summary 18
7.2 User Manual 18
8 Project Management and Cost Analysis 20
8.1 Bill of Materials 20
9 Future Work 20
10 References 21

1 Abstract

This project focuses on the design and implementation of a 4-Digit Electronic Door Lock System using digital logic circuits. The system provides a secure and cost-effective solution for access control by eliminating the need for microcontrollers and instead utilizing 74 series integrated circuits (ICs). Users can enter a 4-digit password via a keypad, and the entered digits are displayed on seven-segment displays. The system compares the entered password with a pre-set code stored in memory components.

Upon entering the correct password, the system activates a relay module to unlock the door. If the password is incorrect, the system remains locked and triggers an error indicator, such as a buzzer or LED. The design employs combinational and sequential circuits, including flip-flops, counters, logic gates, encoders, and decoders, to achieve the desired functionality. A reset option is also provided for user convenience.

The project was successfully implemented on hardware, demonstrating reliable performance and accuracy. By leveraging pure digital logic, the system ensures simplicity, low power consumption, and budget-friendly design. This work emphasizes the practical applications of digital logic in access control systems, while considering factors such as safety, sustainability, and ease of use.

2 Introduction

In an era characterized by the growing demand for smarter and more secure access control systems, the development of innovative, cost-effective, and reliable solutions has become increasingly important. The ability to manage access to secure areas using electronic systems that eliminate the limitations of traditional mechanical locks represents a significant advancement in both convenience and security. This project, titled "4-Digit Electronic Door Lock System Without Microcontroller," addresses these needs by leveraging pure digital logic to design a robust and user-friendly locking mechanism.

Conventional access control systems often rely on microcontrollers or embedded systems, which, while functional, introduce complexity, higher costs, and greater power consumption. Recognizing these limitations, our project introduces a solution that uses combinational and sequential digital logic circuits to perform access control functions without the need for microcontrollers. By using readily available 74-series integrated circuits, our design prioritizes simplicity, reliability, and cost-effectiveness.

The central objective of this project is to develop a 4-digit electronic door lock system that enables users to securely access a locked area by entering a predefined 4-digit password. The system validates the input using digital logic, displays the entered digits on seven-segment displays, and compares them with a preset password. If the entered code matches the stored password, a relay module activates to unlock the door. If the

code is incorrect, the system remains locked and triggers an error indicator such as a buzzer or LED.

This report is structured to provide a detailed understanding of the "4-Digit Electronic Door Lock System Without Microcontroller." It begins by exploring the background and challenges associated with traditional locking mechanisms and the advantages offered by digital logic-based solutions. The subsequent sections outline the design and implementation methodology, highlighting the use of components such as flip-flops, counters, encoders, decoders, and logic gates in achieving the desired functionality.

Throughout the report, we discuss the testing and performance evaluation of the system, demonstrating its accuracy and reliability when implemented on hardware. Additionally, insights are provided into the practical implications, usability, and future scalability of the system.

In essence, the "4-Digit Electronic Door Lock System Without Microcontroller" project exemplifies the integration of pure digital logic to create a secure, efficient, and user-friendly locking system. By focusing on simplicity, sustainability, and cost-effectiveness, this project lays the groundwork for broader applications of digital logic in access control, spanning residential, commercial, and industrial domains.

3 Design

3.1 Problem Formulation

3.1.1 Identification of Scope

Defining the scope of the "4-Digit Electronic Door Lock System Without Microcontroller" project is critical for setting the boundaries and objectives that guide its development. This subsection outlines the specific parameters and limitations governing the project's execution.

Scope Inclusions:

- Access Control: The project focuses on creating a reliable and secure access control system using a 4-digit keypad. It aims to provide users with the ability to lock and unlock doors by entering a predefined 4-digit password.
- Digital Logic Implementation: The scope includes designing the system using pure digital logic (combinational and sequential circuits) without the use of microcontrollers or other complex embedded systems.
- Error Handling: The system will include mechanisms to handle incorrect password entries by providing feedback through error indicators (e.g., a buzzer or LED).
- Memory Storage: The system will utilize 74-series flip-flops and ICs to store the 4-digit password securely.
- User Interaction: The system will incorporate user-friendly interfaces using a keypad and 7-

segment display for code entry and visual feedback.

- Safety and Reliability: Ensuring the safety and reliability of the system is a key consideration. Measures will be taken to protect against common issues such as incorrect entries, unauthorized access attempts, and system failure.

Scope Exclusions:

- Biometric Authentication: The project will not include biometric features (e.g., fingerprint or facial recognition).
- Wireless Communication: The system is designed to work without any wireless communication or remote control features.
- Integration with Smart Home Systems: Integration with broader smart home systems (e.g., IoT) is beyond the scope of this project.
- Scalability: The project is limited to a single door lock system and does not scale to handle multiple access points.

Operational Boundaries:

The system will operate under standard conditions (e.g., stable power supply, room temperature) and is designed for indoor use only. The effectiveness of the system may be limited by the quality of the components used (ICs, switches, etc.) and the range of input signals from the keypad.

3.1.2 Literature Review

A comprehensive review of existing literature and related technologies is essential to understand the context in which the *"4-Digit Electronic Door Lock System Without Microcontroller"* operates. This subsection highlights the key findings from previous research and developments in the field of digital access control systems.

Traditional Locking Mechanisms:

Historically, mechanical locks have been the go-to solution for access control, but these systems have limitations in terms of convenience, security, and scalability. Electronic locks have emerged as more secure and flexible alternatives, but they often rely on complex microcontroller-based systems.

Digital Logic-Based Systems:

While digital logic circuits have been widely used in various electronic applications, their use in access control systems without microcontrollers is limited. Studies have shown that digital logic can perform reliable tasks such as code validation and memory storage when implemented with simple ICs like flip-flops, counters, and decoders.

Keypad-Based Access Systems:

Keypad-based access control systems are widely used in both commercial and residential security systems. Many of these systems use a microcontroller for input validation and password comparison. However, the use of discrete digital components, such as 74-series ICs, for the same purpose presents an opportunity for simpler, more affordable systems.

IC-Based Security Solutions:

IC-based security solutions, especially those using 74-series ICs for memory and logic operations, have been researched for their low power consumption, high reliability, and ease of integration. However, the challenge remains in managing password storage and retrieval effectively while maintaining security.

Challenges and Considerations:

Key challenges in digital locking systems include password security, error handling, and ensuring the system's reliability. Additionally, without the use of a microcontroller, synchronizing the input data and password storage becomes a challenge that requires careful circuit design.

3.1.3 Formulation of Problem

The *"4-Digit Electronic Door Lock System Without Microcontroller"* aims to address specific challenges in the field of access control systems. This subsection outlines the problem areas that the project seeks to resolve.

1. Inefficiency of Conventional Mechanical Locks:

- **Problem:** Traditional mechanical locks can be inconvenient and lack the flexibility to easily change access codes or provide additional features such as feedback or security alerts.
- **Objective:** The project seeks to develop a secure and efficient digital locking system that eliminates the need for traditional mechanical locks while offering a user-friendly interface.

2. Complex and Expensive Microcontroller-Based Systems:

- **Problem:** Most modern access control systems rely on microcontrollers, which increase both the complexity and cost of the system.
- **Objective:** The project aims to implement a purely digital logic-based system using affordable and readily available ICs, ensuring a cost-effective and reliable solution.

3. Lack of Error Handling in Conventional Systems:

- **Problem:** Many existing locking systems do not provide proper feedback when an incorrect code is entered, leading to potential security risks or user frustration.
- **Objective:** The project focuses on incorporating error handling mechanisms such as visual and audible feedback to improve the user experience and security of the system.

4. Difficulty in Password Storage and Retrieval:

- **Problem:** Storing and retrieving a secure password in a digital lock system without the aid of a microcontroller is a challenging task.
- **Objective:** The project aims to solve this problem using 74-series flip-flops and other digital ICs to store and retrieve the password securely, ensuring both reliability and efficiency.

5. Need for Simple and Secure Access Control:

- **Problem:** Many users prefer simple and secure access control systems that do not require complex authentication methods (e.g., biometrics or smart cards).
- **Objective:** The project aims to develop a straightforward yet secure 4-digit keypad-based access system that is easy to operate while maintaining a high level of security.

3.1.4 Analysis

The analysis section delves into the implications and significance of the problem areas identified in the previous subsection. By examining these issues, the project aims to provide effective solutions.

1. Inefficiency of Conventional Mechanical Locks:

- **Analysis:** Mechanical locks are prone to wear and tear, and changing or distributing keys can be inconvenient. A digital system can offer enhanced security and user flexibility.

2. Complex and Expensive Microcontroller-Based Systems:

- **Analysis:** Microcontrollers introduce complexity and cost, making the system less accessible. By using simple logic gates and ICs, the project aims to offer a more affordable and reliable alternative.

3. Lack of Error Handling in Conventional Systems:

- **Analysis:** Without proper error handling, users may be left unsure if a mistake was made, increasing the risk of unauthorized access. Incorporating feedback systems can improve security and user satisfaction.

4. Difficulty in Password Storage and Retrieval:

- **Analysis:** Storing passwords securely and retrieving them reliably without microcontrollers is challenging. This project addresses this by using flip-flops to store and validate passwords with minimal power consumption.

5. Need for Simple and Secure Access Control:

- **Analysis:** The simplicity of a keypad-based system is both its strength and its challenge. While it is easy for users to interact with, the system must ensure that the password storage and validation processes are secure and foolproof.

Conclusion

The analysis of these problem areas highlights the need for a simple, secure, and efficient access control system. The *"4-Digit Electronic Door Lock System Without Microcontroller"* project addresses these concerns by implementing digital logic solutions using affordable ICs. The subsequent sections of this report will describe how these issues are resolved and provide a comprehensive solution to create a reliable, cost-effective, and user-friendly access control system.

The successful implementation of the *"4-Digit Electronic Door Lock System Without Microcontroller"* project requires the careful selection and integration of various electronic components to ensure functionality, security, and reliability. This section provides a detailed overview of the key components employed in the system and their roles in the design.

Keypad (4x4 Matrix Keypad):

The 4x4 matrix keypad serves as the primary input device for the system. It allows users to enter a 4-digit code to unlock the door. The keypad consists of rows and columns that are scanned to detect which key is pressed. The system uses the keypad to capture the input and compare it against the stored password.

74-series Flip-Flops (e.g., 7474 D Flip-Flop):

The 74-series D flip-flops are used for memory storage in this system. They store the 4-digit password entered by the user and allow the system to compare it with the preset password. The flip-flops play a crucial role in ensuring that the entered code is saved and can be accessed for validation. The use of flip-flops eliminates the need for a microcontroller while providing reliable and secure memory storage.

74LS47 BCD to 7-Segment Decoder/Driver:

The 74LS47 BCD to 7-segment decoder/driver is used to drive the 7-segment displays. It converts the binary coded decimal (BCD) input to the appropriate signals that control the segments of the 7-segment display. This allows the user to see the digits of the entered code or other system statuses on the display.

7-Segment Display (4 Digits):

The 7-segment display is used to show the entered digits of the 4-digit password and provide visual feedback to the user. It is crucial for the user interface, allowing users to monitor their input and system status, such as whether the entered code is correct or incorrect.

Relay Module (e.g., SRD-05VDC-SL-C):

The relay module controls the door locking mechanism. It allows the system to control an external lock or door mechanism, activating the lock when the correct code is entered. The relay serves as an interface between the low-voltage control circuit and the high-voltage actuators.

Buzzer (or Piezoelectric Buzzer):

The buzzer is used to provide audible feedback to the user. It signals whether the

entered code is correct or incorrect. A short beep indicates a correct code, while a longer or different tone is used to indicate an incorrect code or error.

Power Supply (5V DC Regulator):

The power supply is essential for providing the appropriate voltage to the entire system. The 5V DC regulator ensures that all components, including the keypad, 7-segment display, flip-flops, and relay, receive stable power for reliable operation.

Push-Button Reset (Manual Reset):

The reset button is used to manually reset the system, clearing the entered code and allowing a fresh attempt. This ensures that the system can recover from incorrect entries or reset to a known state when needed.

Logic Gates (AND, OR, NOT):

Logic gates are used to perform the necessary logical operations to compare the entered password with the stored password and trigger the relay to unlock the door. These gates handle the input validation and control the flow of signals within the system.

555 Timer (IC 555):

The 555 timer IC is used in monostable mode to create a timing pulse that locks the system after three incorrect input attempts. The timer generates a pulse to disable the keypad input for a predefined duration (e.g., 30 seconds). This temporary lockout period gives the user time to re-enter the correct code and prevents unauthorized access attempts during this window.

Counter (e.g., 74LS90 Decade Counter):

A decade counter like the 74LS90 is used to count the number of consecutive incorrect attempts. Each time an incorrect code is entered, the counter increments. When the counter reaches a value of three, the output of the counter triggers the 555 timer to activate the lock mechanism, preventing further input. After the lockout period (determined by the 555 timer), the counter resets, and the system allows new input attempts.

Reset Logic (Using Logic Gates):

The reset logic is employed to reset the counter and timer after the system has been locked. When the system is locked (after three wrong attempts), the reset logic ensures that the system returns to its initial state after the lockout period. This prevents further lockout cycles after the user has had the chance to correct the entered code.

Interfacing with the Keypad Input:

Once the locking mechanism is triggered, the 555 timer generates a pulse that disables the keypad input, effectively preventing the user from entering additional codes. This is done by controlling the input line to the keypad via logic gates. During the lockout

period, no further signals are sent to the flip-flops and 7-segment displays, ensuring the system remains inactive.

The subsequent sections of this report will explore the system's circuit design, logic implementation, and testing procedures, providing a comprehensive understanding of its operation.

3.2 Circuit Diagram

1. Keypad Input and Digital Logic

- **Keypad (4x4 matrix)**: The user enters a 4-digit code using a keypad. Each key press is detected by the **4x4 keypad** matrix, where rows and columns are scanned by the logic circuit.

- **ICs (74-series)**: The system uses **74-series ICs** for logic operations to handle the key inputs, as well as to manage the 4-bit data passed to the system. Flip-flops store the current entered digits temporarily.

- **Sequential Logic (Flip-flops)**: The flip-flops (e.g., **D-flip flops**) are used to store the entered digits temporarily and manage the sequence of inputs.

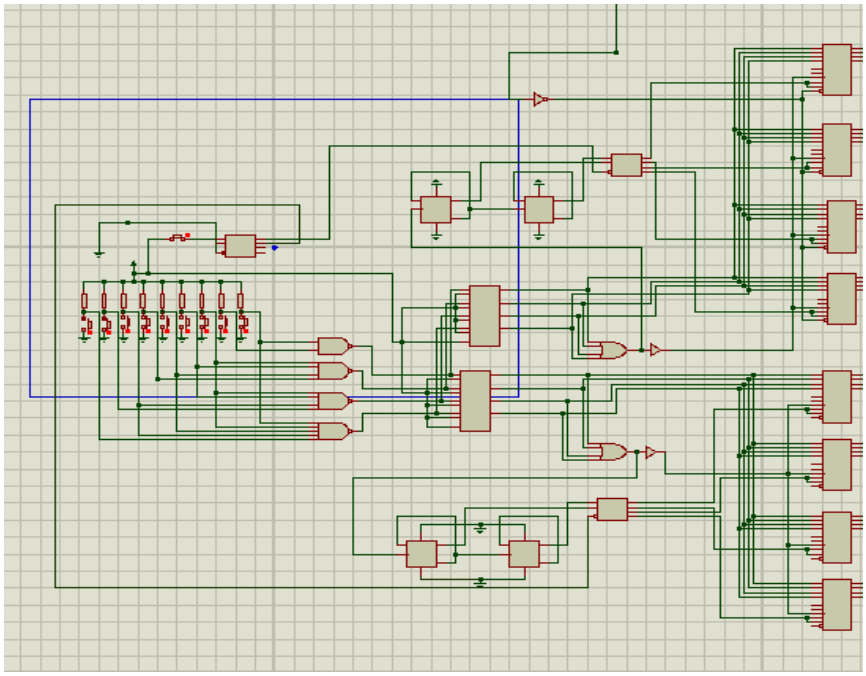

2. Code Matching and Control Logic

- **Combinational Logic**: The entered code is compared with the preset password using 7485 IC. This IC is in charge of authenticating the saved password and the user input. Each of these IC will compare according to the place value of the saved password and the user input. The output that will be used as correct is QA=B. QA<B & QA>B will be considered incorrect.

'A' = user input

'B' = saved password

If the code matches the preset password, the system triggers the relay to unlock the door.

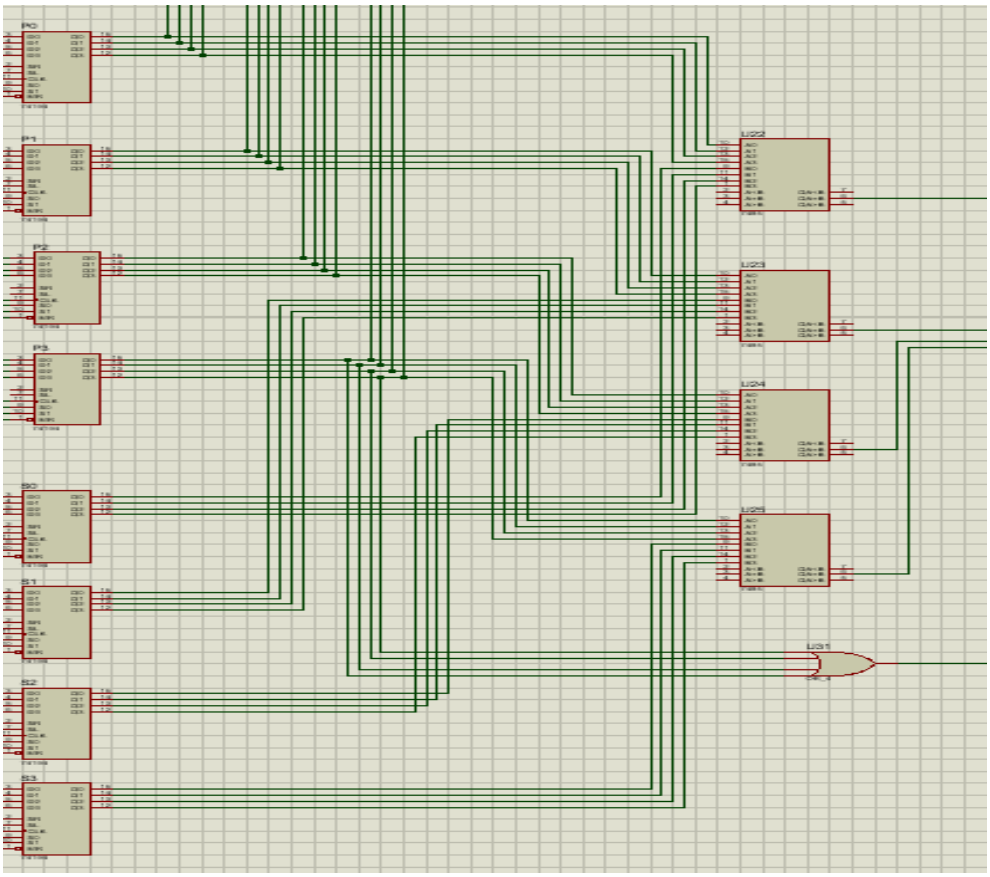

3. Locking Mechanism with 555 Timer and Counter

- **Counter (e.g., 74LS90 Decade Counter)**: The **counter** keeps track of the number of consecutive incorrect attempts. Each wrong input increments the counter. When it reaches a value of **three**, the system locks the user out, triggering the **555 timer** for a lockout period.
-
- **555 Timer (Monostable Mode)**: The **555 timer** is used to create a lockout period for security. When three consecutive incorrect attempts are detected, the timer triggers the lockout, disabling further input for a predefined time (e.g., 30 seconds).

4. Output and Relay Control

- **Relay**: The relay, controlled by the logic output, triggers the door lock mechanism. If the correct code is entered, the relay is activated, and the door lock is opened.
- **7-Segment Displays**: The system uses **7-segment displays** to show feedback to the user, such as whether the entered code was correct or if the system is locked after three incorrect attempts.

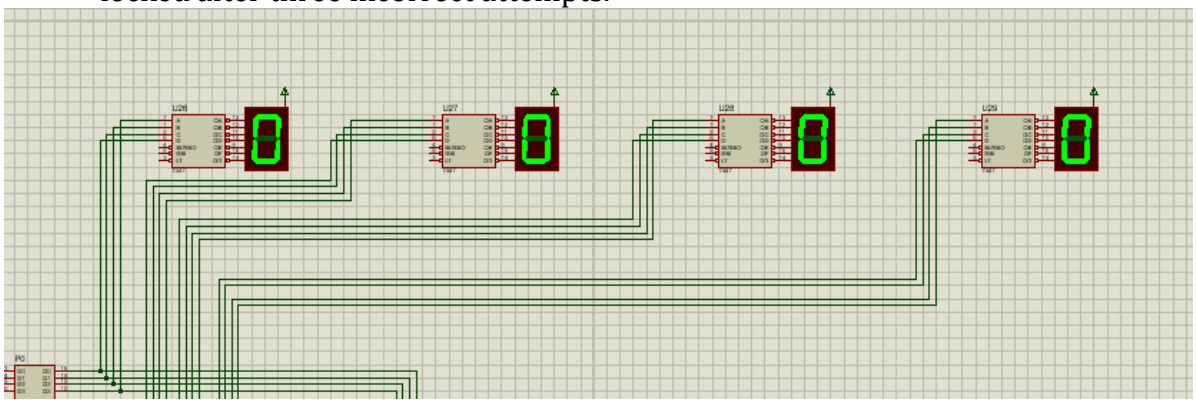

5. Power supply

- The entire system is powered by a **5V DC supply**, which powers the keypad, ICs, the relay, and other components

3.3 Simulation Model

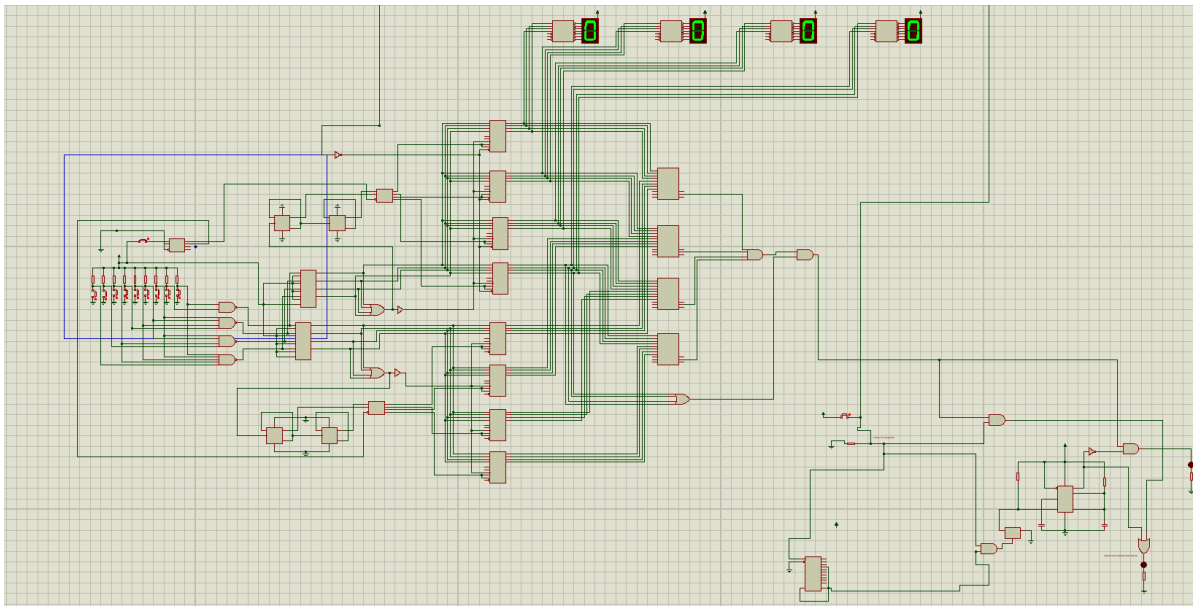

3.3 Hardware Design

Using this simulation model, we constructed our hardware design on breadboards using appropriate 74-series IC's, gates and timer.

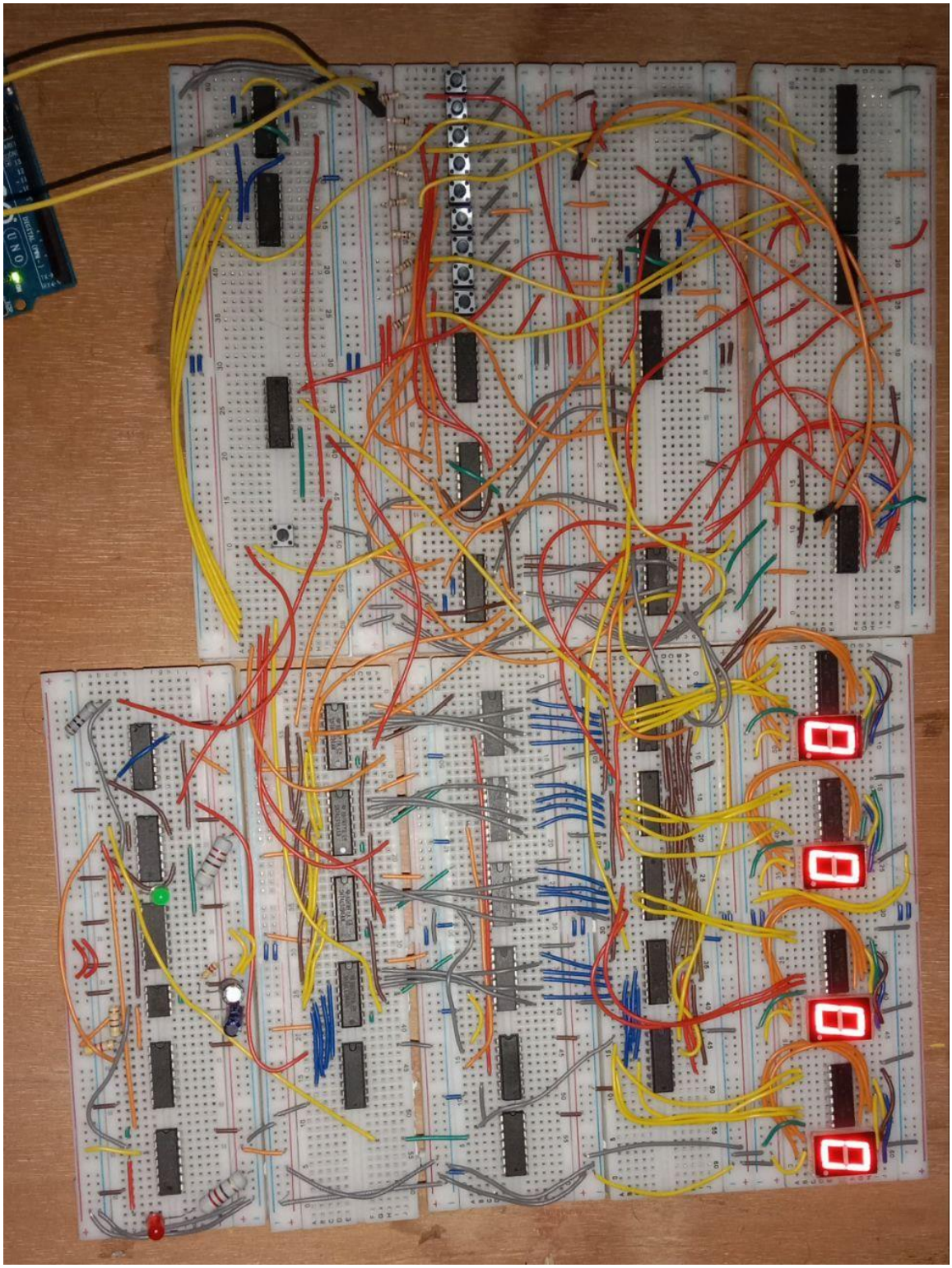

4. Implementation

4.1 Description

The 4-digit smart door lock system is a logic-gate-based design that replaces the need for microcontrollers. It uses ICs such as 4555, 4013, 4043, 74194, 7485, 4017, 4066, 555, 4072, 4011, and 7447 to create a digital locking mechanism. The primary goal of this system is to ensure security by validating a 4-digit password and providing visual feedback through LEDs. Each component in the circuit serves a specific role, ensuring the system's efficiency and reliability.

Input Handling: The user enters a 4-digit password through a keypad. These inputs are processed using binary encoding to translate them into a format compatible with the digital circuitry. IC 4555 plays a crucial role in handling these inputs. It encodes the entered digits and sends them to the comparator circuit.

Password Verification: The core of the password validation process lies in IC 7485, which is a 4-bit magnitude comparator. It compares the user-entered binary password with the pre-set binary password stored in the circuit. If the two passwords match, the system activates the unlock mechanism. This comparison process is accurate and ensures that only the correct password can trigger the green LED and unlock the system.

Feedback Mechanism: The feedback system is an essential part of the design, providing real-time information to the user. If the password is correct, the green LED lights up, indicating successful validation and unlocking. If an incorrect password is entered, the system allows up to three consecutive attempts. After the third incorrect attempt, the system activates a red LED and freezes all operations for 10 to 11 seconds. This freeze mechanism acts as a security feature to prevent brute-force attempts. During this time, no input is processed, ensuring the system's integrity.

Reset Mechanism: After the freeze period, the system resets itself, allowing the user to input a new password. This reset functionality is crucial for maintaining the system's usability while enforcing strict security protocols. The reset circuit ensures that all components return to their default state, ready to accept fresh inputs.
The system operates at low power and uses LEDs and a 7-segment display to provide clear feedback. The 7-segment display, driven by IC 7447, shows the entered digits, helping the user confirm their input. This user-friendly interface enhances the overall experience.

4.2 Experiment and Data Collection

To test the system's functionality, a series of experiments were conducted under controlled conditions. These experiments aimed to evaluate the performance, reliability, and response of the system in different scenarios:
Multiple tests were conducted with the correct password to verify the system's accuracy in unlocking and lighting up the green LED. The results were consistent, confirming that the system correctly identified valid inputs.

Tests were performed with various incorrect password combinations to evaluate the system's error-detection capability. The system rejected these inputs and activated the red LED after three failed attempts, followed by the freeze period.
The freeze functionality was tested by entering three incorrect passwords in succession. The system successfully locked out further attempts for 10 to 11 seconds before resetting.
After the freeze period, the reset mechanism was tested to ensure the system returned to its default state, ready to accept new inputs. The reset function worked seamlessly, confirming the system's readiness for subsequent use.
Measurements were taken to assess the system's power consumption during normal operation, freeze periods, and reset cycles. The results showed efficient power usage, making the system suitable for battery-operated setups.

4.3 Data Analysis

The data collected during the experiments was analyzed to understand the system's behavior and performance:
Accuracy: The system demonstrated high accuracy in validating correct passwords and rejecting incorrect ones. The comparator circuit (IC 7485) performed reliably, ensuring only valid inputs triggered the unlock mechanism.
Error Handling: The system effectively managed incorrect inputs by activating the red LED and enforcing a freeze period. This feature added a layer of security by deterring repeated incorrect attempts.
Response Time: The system's response to password input was quick, with minimal delay between input and feedback. This ensured a smooth and user-friendly experience.
Power Efficiency: The system consumed minimal power, making it suitable for long-term use without frequent battery replacements. The LEDs and 7-segment display were optimized for low power consumption.

4.4 Results

The results of the implementation phase confirm the system's effectiveness and reliability. Key achievements include:
The system consistently validated correct passwords, lighting up the green LED and unlocking the mechanism.
Incorrect passwords were accurately rejected, with the red LED providing clear feedback.
The freeze mechanism worked as intended, preventing further attempts during the lockout period.
The inclusion of a 7-segment display and LED indicators made the system intuitive and easy to use. Users could easily confirm their inputs and understand the system's feedback.
The modular design allows for future enhancements, such as adding more digits to the password or integrating additional security features. The system's reliance on standard ICs makes it adaptable to various requirements.
The system demonstrated consistent performance across all tests, confirming its robustness and suitability for real-world applications.
The implementation of the 4-digit smart door lock system showcases the potential of logic-gate-based designs in creating secure, efficient, and user-friendly solutions. The

combination of accurate password validation, effective error handling, and intuitive feedback mechanisms ensures a high level of security while maintaining simplicity and accessibility. This project serves as a testament to the capabilities of digital logic in solving complex problems without the need for microcontrollers.

Youtube Link :

Demonstration Video: **https://youtu.be/Xf45e3j7Krk?si=riuOB4KXEVfmdInY**

5. Design Analysis and Evaluation

5.1 Novelty

The 4-digit smart door lock system is a unique approach to security solutions, as it uses only logic gate ICs and avoids the complexity of microcontroller-based designs. This novelty lies in its simplicity and accessibility, offering a cost-effective and reliable alternative for users with limited technical expertise. The design demonstrates how standard digital ICs can be leveraged innovatively to perform sophisticated tasks, such as password validation and security enforcement.

5.2 Design Considerations

5.2.1 Considerations to Public Health and Safety

The system prioritizes user safety by operating on low voltage, reducing the risk of electrical hazards. Additionally, the locking mechanism prevents unauthorized access, safeguarding users' physical and emotional well-being by ensuring their homes or personal spaces remain secure. The LEDs and display elements were designed to provide clear feedback without causing visual strain, enhancing usability and safety.

5.2.2 Considerations to Environment

Environmental sustainability was a key factor in the design process. The system uses minimal components, reducing electronic waste and promoting efficient resource utilization. Additionally, the low-power operation ensures minimal energy consumption, aligning with environmental conservation goals. The modular nature of the design allows for easy recycling or repurposing of components.

5.2.3 Considerations to Cultural and Societal Needs

This project addresses the universal need for security, catering to diverse cultural and economic backgrounds. Its affordability makes it accessible to a wide range of users, while its simplicity ensures it can be adopted in educational settings for learning purposes. The design's adaptability means it can be tailored to specific cultural or societal requirements, such as integrating local languages in the user interface.

5.3 Investigations

5.3.1 Literature Review

The project was inspired by existing research on digital logic systems and their applications in security. Studies highlighted the potential of IC-based systems as reliable and cost-effective alternatives to microcontroller-driven designs. This knowledge informed the choice of components and the overall architecture of the system, ensuring it adhered to best practices in digital circuit design.

5.3.2 Experiment Design

A systematic approach was adopted to design the experiments, focusing on individual modules and their integration. For instance, the password validation module was tested independently to ensure accurate comparison of inputs. Similarly, the feedback mechanism was evaluated for its responsiveness and clarity. This modular testing approach allowed for precise troubleshooting and refinement of each subsystem before final integration.

5.3.3 Data Analysis and Interpretation

The data collected during testing provided insights into the system's performance. For example, the response time of the lock mechanism was analyzed to ensure it met user expectations. Any discrepancies or anomalies in the data were investigated, leading to adjustments in the design. This iterative process ensured that the final system was both efficient and reliable.

While the design achieved its objectives, certain limitations were encountered:

- Expanding the system to accommodate longer passwords or additional features would require more components, potentially complicating the design.
- Some ICs required precise synchronization, which could be challenging without external clock sources.
- The breadboard-based implementation limited the compactness of the design, which could be addressed through PCB integration in future iterations.

5.5 Impact Assessment

5.5.1 Assessment of Societal and Cultural Issues

The project provides a low-cost security solution, addressing the growing societal need for affordable and reliable locking mechanisms. Its straightforward design ensures it can be implemented in various cultural contexts without requiring significant customization. By promoting security and peace of mind, the system contributes positively to societal well-

being.

5.5.2 Assessment of Health and Safety Issues

Health and safety were central to the design, with low-voltage operation minimizing risks of electrical hazards. The system's robust locking mechanism also enhances user safety by preventing unauthorized access. Additionally, the design avoids the use of toxic materials, ensuring compliance with health and safety standards.

5.5.3 Assessment of Legal Issues

The system complies with industry standards for electronic security devices, ensuring it meets legal requirements for deployment. The design avoids patent infringement by using widely available components and adhering to open design principles. This ensures the system can be freely used and adapted by others.

5.6 Sustainability and Environmental Impact Evaluation

The project emphasizes sustainability by using energy-efficient components and minimizing material waste. The modular design allows for easy repair or replacement of individual parts, extending the system's lifespan. By avoiding complex and resource-intensive microcontrollers, the project reduces its environmental footprint, setting an example for eco-friendly electronic designs.

5.7 Ethical Issues

The project upholds ethical standards by ensuring user privacy and security. The password validation process is secure, with no risk of data leakage. Additionally, the system's affordability and simplicity make it accessible to a broad audience, promoting inclusivity and fairness. The design also aligns with ethical manufacturing practices, avoiding components that may contribute to environmental or social harm.
The 4-digit smart door lock system represents a thoughtful and responsible approach to design, addressing technical, societal, and environmental considerations. Its emphasis on simplicity, accessibility, and sustainability makes it a valuable contribution to the field of digital security.

6 Reflection on Individual and Team work

6.1 Individual Contribution of Each Member

2006167 Md. Hamidur Rahman: Hardware implementation and design modification

2006168 Md. Iftiar Hasan Jihad: Hardware implementation, components management

2006175 Meherin Tasfia: Research, circuit designing and planning, implementation

2006179 Md. Mehedi Hasan: Hardware architecture design, implementation and components management

7 Communication

7.1 Executive Summary

We are excited to announce the launch of the 4-Digit Door Lock System, a modern, keyless access control solution for homes, offices, and institutions. This smart lock uses a secure 4-digit PIN, offering enhanced security, convenience, and cost savings. Key features include PIN authentication, error lockout for failed attempts, user PIN customization, and low power consumption with low-battery alerts. The system's intuitive design ensures easy operation, while risk mitigation strategies like lockout periods and PIN reset options provide extra peace of mind. This innovative lock redefines secure access, making traditional keys a thing of the past.

7.2 User Manual

System Assembly on Breadboard

1. Unpack the system components, including the push buttons for the keypad, reset button, on-off switch for display, and all required ICs, resistors, capacitors, and LED.
2. Place the breadboard on a flat, stable surface.
3. Insert the 74 series logic gates, shift registers, comparators, switches, flip-flops, and buffers into the breadboard according to the provided circuit diagram.
4. Connect the components using jumper wires according to the circuit schematic.
5. Insert push buttons on the breadboard to function as keypad inputs and reset controls.
6. Attach resistors, capacitors, and other necessary passive components as specified in the circuit diagram.
7. Use the on-off switch on the breadboard to control the display power.
8. Double-check all connections to ensure no loose or incorrect wiring.

Setting Up the System

1. Power on the system using the on-off switch for the display.
2. Follow the on-screen instructions to enter the default PIN provided in the user manual.
3. Change the default PIN to a secure 4-digit PIN of your choice using the push button keypad.
4. Confirm the new PIN by re-entering it when prompted.

Using the Lock System

1. To unlock the system, enter your 4-digit PIN using the push button keypad.
2. If the PIN is correct, the lock will disengage, and access will be granted.
3. If the PIN is incorrect, the system will prompt you to try again.
4. After multiple incorrect attempts, the system will activate an error lockout, preventing further entries for a set period.

Customizing PIN

1. Press the "Change PIN" button or follow on-screen instructions to access the PIN customization menu.
2. Enter your current PIN to verify your identity using the push button keypad.
3. Enter a new 4-digit PIN and confirm it by re-entering it.
4. The system will notify you when the PIN is successfully updated.

Maintenance and Troubleshooting

1. Regularly check the battery level indicator and replace batteries as needed.
2. If the system becomes unresponsive, press the reset button to perform a system reset as instructed in the user manual.
3. For system malfunctions or technical issues, consult the troubleshooting section of the user manual or contact technical support.

Safety and Security Tips

1. Choose a strong, unique PIN that is not easily guessable.
2. Do not share your PIN with unauthorized users.
3. Regularly update your PIN to maintain security.
4. In case of system tampering or repeated failed attempts, check for alerts or system lockouts.

System Reset

1. If you forget your PIN, use the master override PIN provided by the manufacturer.
2. Follow the steps in the user manual to reset the system and create a new user PIN.

8 Project Management and Cost Analysis

8.1 Bill of Materials

Component	Quantity	Price	Component	Quantity	Price
4078 IC	2	60	7 Segment Display	4	40
74194 IC	8	560	Male-Male Jumper	1	80
7447 IC 4013 IC 4555 IC	4 4 2	120 60 90	Jumper Box 1k registor Led	4 100 10	520 20 10
7408 IC	2	30	4043 IC 4011 IC	2 2	70 40
555 timer	5	40	7485 IC	4	80
4072	6	180	7421 IC 7420 IC	1 4	30 100
Breadboard	9	720	Push Button	10	20
		Total cost 2870 Tk			

9 Future Work

Enhanced Security Features: Incorporating encryption algorithms to protect data and adding multi-user support for personalized access levels, improving overall system security.

Advanced User Interface: Replacing the keypad with a touch screen or mobile app for a more modern, convenient user experience and adding support for remote access via Wi-Fi or Bluetooth.

Optimization of Hardware: Improving power efficiency through low-power components and adding fail-safe mechanisms, such as emergency overrides and backup power supplies, to ensure system reliability.

Integration with Smart Home Devices: Connecting the door lock system to other smart home devices like security cameras and alarms, creating a more comprehensive and interconnected home security solution.

10 References

1. https://www.researchgate.net/publication/317305160_THE_DESIGN_AND_CONSTRUCTION_OF_A_2-DIGIT_ELECTRONIC_LOCK_SYSTEM_USING_SIMPLE_CIRCUIT_ELEMENTS_AND_DIGITAL_ELECTRONIC_LOGIC_GATES

2. https://www.google.com/amp/s/www.instructables.com/Digital-Door-lock-System-With-Keypad/%3Famp_page=true

3. https://www.researchgate.net/publication/264495979_Design_Analysis_of_a_Security_Lock_System_using_Pass-Code_and_Smart-Card

4. https://www.instructables.com/Digital-Door-lock-System-With-Keypad/

3. https://www.alldatasheet.com/