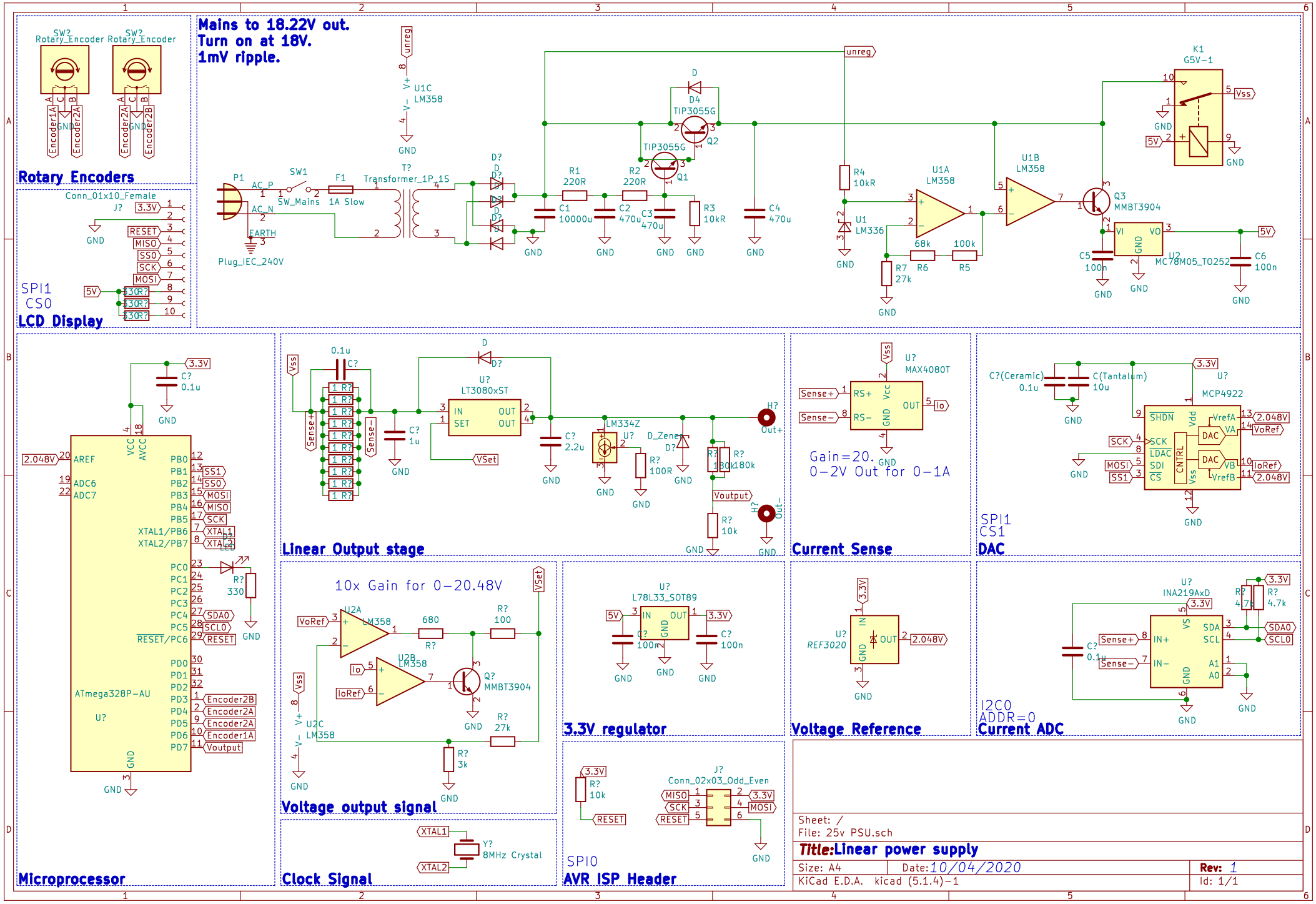
Mains to 18.22V out.
Turn on at 18V.
1mV ripple.
Rotary Encoders
SW? Rotary_Encoder
Encoder1A
Encoder1B
Encoder2A
Encoder2B
GND
Conn_01x10_Female
J?
3.3V
RESET
MISO
SS0
SCK
MOSI
5V
330R?
SPI1
CS0
LCD Display
P1
AC_P
AC_N
EARTH
Plug_IEC_240V
SW1
SW_Mains
F1
1A Slow
T?
Transformer_1P_1S
D?
D
D4
TIP3055G
Q2
Q1
R1
220R
R2
220R
C1
10000u
C2
470u
C3
470u
R3
10kR
C4
470u
U1C
LM358
V+
V−
unreg
R4
10kR
U1
LM336
R7
27k
U1A
LM358
68k
R6
100k
R5
U1B
LM358
Q3
MMBT3904
C5
100n
U2
MC78M05_TO252
VI
VO
C6
100n
K1
G5V−1
Vss
Linear Output stage
0.1u
C?
1R?
Sense+
Sense−
U?
LT3080xST
IN
SET
OUT
VSet
C?
1u
C?
2.2u
LM334Z
R?
100R
D_Zener
R?
180k
Out+
Voutput
R?
10k
Out−
Current Sense
U?
MAX4080T
RS+
RS−
Vcc
GND
Io
Gain=20.
0−2V Out for 0−1A
DAC
C?(Ceramic)
0.1u
C(Tantalum)
10u
MCP4922
SHDN
SCK
LDAC
SDI
CS
CNTRL
Vdd
Vss
VrefA
VA
VrefB
VB
DAC
2.048V
VoRef
IoRef
SPI1
CS1
Microprocessor
2.048V
AREF
ADC6
ADC7
VCC
AVCC
PB0
PB1
PB2
PB3
PB4
PB5
XTAL1/PB6
XTAL2/PB7
PC0
PC1
PC2
PC3
PC4
PC5
RESET/PC6
PD0
PD1
PD2
PD3
PD4
PD5
PD6
PD7
SS1
SDA0
SCL0
Voutput
ATmega328P−AU
R?
330
LED
Voltage output signal
10x Gain for 0−20.48V
U2A
LM358
VoRef
680
R?
100
U2B
LM358
Io
IoRef
Q?
MMBT3904
U2C
LM358
R?
27k
R?
3k
3.3V regulator
U?
L78L33_SOT89
IN
OUT
C?
100n
Voltage Reference
U?
REF3020
2.048V
Current ADC
U?
INA219AxD
Sense+
Sense−
IN+
IN−
VS
SDA
SCL
A1
A0
R?
4.7k
I2C0
ADDR=0
Clock Signal
XTAL1
XTAL2
Y?
8MHz Crystal
AVR ISP Header
R?
10k
RESET
J?
Conn_02x03_Odd_Even
MISO
SCK
RESET
3.3V
MOSI
SPI0
Sheet: /
File: 25v PSU.sch
Title: Linear power supply
Size: A4
Date: 10/04/2020
Rev: 1
KiCad E.D.A. kicad (5.1.4)−1
Id: 1/1