Analog Closed-Loop DC Motor Speed Controller with PWM and Overcurrent Protection

Team Members

- Patanjali Dwivedi (24JE0831)
- Piyush Singh (24JE0832)
- Poladi Hamsini (24JE0833)

Objective of the Project

The objective of this project is to design an analog PWM-based DC motor speed controller using op-amps and a MOSFET driver. The system regulates motor speed through PWM and includes current sensing for overload protection. It also uses back-EMF feedback to achieve closed-loop speed control, maintaining stable motor speed under varying loads.

Apparatus and Components Required

S.No	Component	Value	Quantity
1.	Opamp (IC 741)	-	9
2.	NMOS	-	1
3.	NPN BJT	-	1
4.	Function Generator	-	1
5,	MSO	-	1
6.	DC Power Supply	-	1
7.	DC motor	-	1
8.	Diode	-	1
9.	Potentiometers (10k)	-	2
10.	Resistors	47kΩ (1), 20kΩ (2), 1kΩ (6), 10kΩ (3), 100 Ω (1), 100 kΩ (1), 0.1 Ω (1)	15
11.	Capacitors	10uF (2)	2
12.	Breadboard	-	3
13.	Multimeter	-	1
14.	Connecting Wires	-	-

(subject to changes)

Circuit Diagram

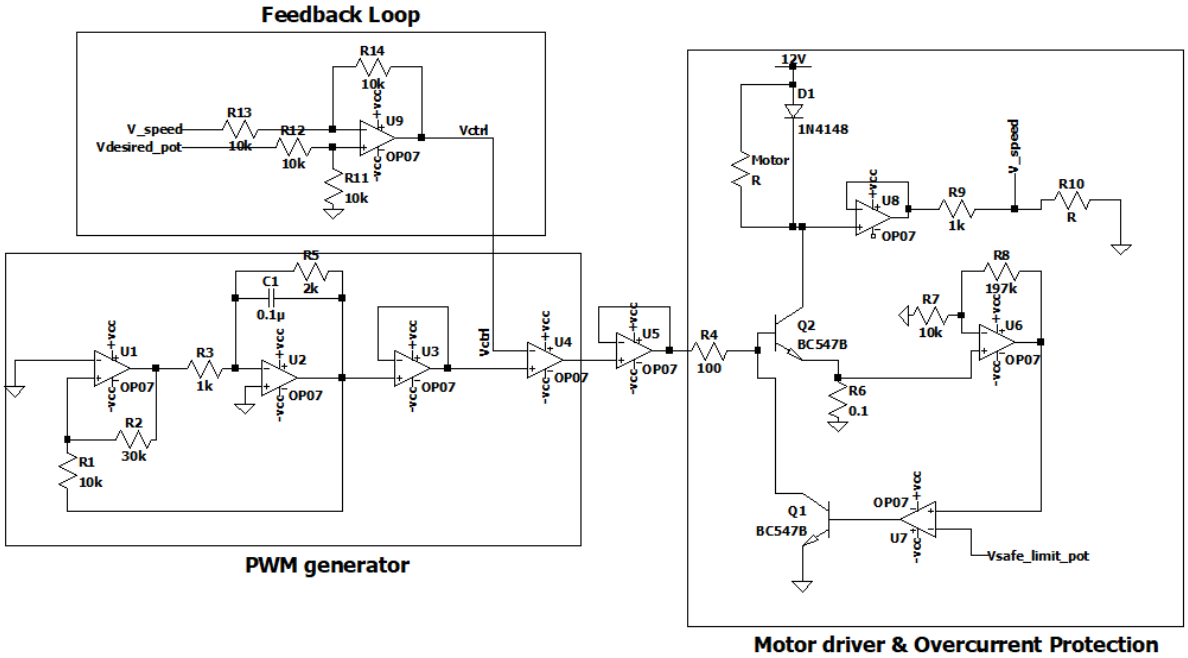

Working Principle

The proposed system controls the speed of a DC motor using Pulse Width Modulation (PWM) generated through analog circuitry. A triangle wave is produced using an op-amp based oscillator and compared with a reference voltage using a comparator. The comparator output generates a PWM signal whose duty cycle varies according to the reference voltage. This PWM signal drives a MOSFET power switch, which regulates the effective voltage supplied to the motor and thereby controls its speed.

To protect the motor and power device, a current sensing resistor is placed in series with the MOSFET source. The voltage across this resistor is proportional to the motor current and is amplified using an op-amp. If the current exceeds a preset limit, a comparator triggers a shutdown mechanism that disables the MOSFET, preventing overload damage.

For closed-loop speed regulation, the system utilizes the motor's back electromotive force (back-EMF), which is proportional to the motor speed. This voltage is sensed through a resistor divider and buffered using an op-amp. The sensed speed voltage is compared with the reference speed using an error (difference) amplifier, and the resulting error signal adjusts the PWM duty cycle. As a result, the controller automatically increases or decreases the motor drive to maintain a nearly constant speed even when the load changes.

Expected Output

The circuit should generate a PWM signal to control the speed of a DC motor through a MOSFET driver. By adjusting the potentiometer, the motor speed varies smoothly from low to high. If the motor current exceeds the preset limit, the overcurrent protection circuit automatically shuts off the motor. Additionally, with back-EMF feedback, the system maintains nearly constant motor speed even when the load changes.

Practical Applications

- Speed regulation of electric fans and blower systems.
- Motor speed control in conveyor belt and material handling systems.
- Precision DC motor control in robotics and automated mechanisms.
- Speed stabilization in power tools such as drills and cutting equipment.
- Control of small DC motors used in pumps, cooling fans, or actuators in Electric vehicle auxiliary systems

Conclusion

This project integrates several concepts studied throughout the lab, including op-amp circuits, comparators, PWM generation, and MOSFET-based power switching. By combining these elements, the system demonstrates practical DC motor speed control along with current protection and feedback-based regulation. The project highlights how different analog electronics concepts work together in a real-world application.