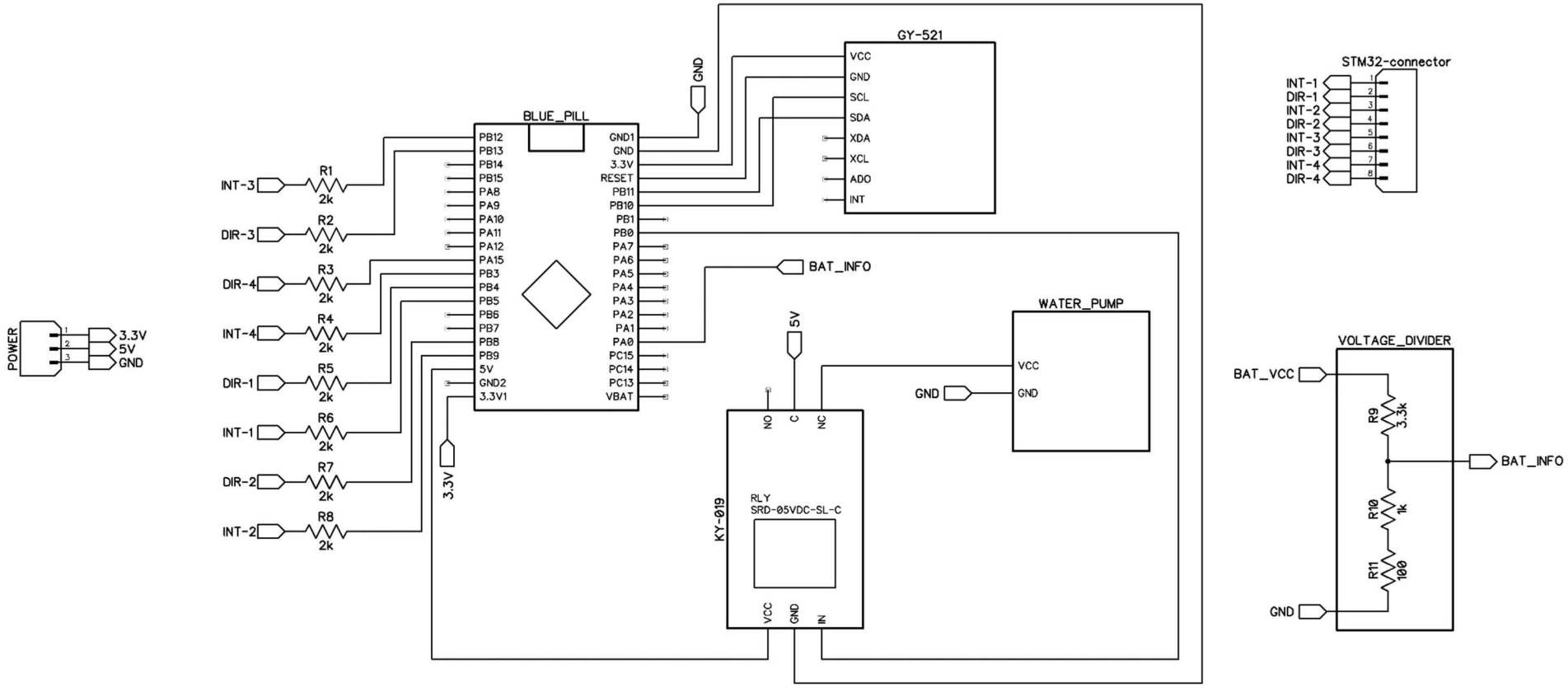
POWER
3.3V
5V
GND
BLUE_PILL
PB12
PB13
PB14
PB15
PA8
PA9
PA10
PA11
PA12
PA15
PB3
PB4
PB5
PB6
PB7
PB8
PB9
5V
GND2
3.3V1
GND1
GND
3.3V
RESET
PB11
PB10
PB1
PB0
PA7
PA6
PA5
PA4
PA3
PA2
PA1
PA0
PC15
PC14
PC13
VBAT
INT-3
R1
2k
DIR-3
R2
2k
DIR-4
R3
2k
INT-4
R4
2k
DIR-1
R5
2k
INT-1
R6
2k
DIR-2
R7
2k
INT-2
R8
2k
3.3V
GND
GY-521
VCC
GND
SCL
SDA
XDA
XCL
ADO
INT
BAT_INFO
5V
KY-019
NO
C
NC
RLY
SRD-05VDC-SL-C
VCC
GND
IN
WATER_PUMP
VCC
GND
GND
STM32-connector
INT-1
DIR-1
INT-2
DIR-2
INT-3
DIR-3
INT-4
DIR-4
VOLTAGE_DIVIDER
BAT_VCC
R9
3.3k
R10
1k
R11
100
GND
BAT_INFO